PUMPER

BODY
Long Aluminum 2nd Gen Pumper

CHASSIS
Velocity Chassis (Big Block)

CHASSIS

AXLE, FRONT, CUSTOM
22,800 lb TAK-4 Axle

AXLE, REAR
27,000 lb Meritor Axle

ENGINE
525 HP DD13 Engine

TRANSMISSION
Allison 5th Gen, 4000 EVS P

BUMPER
22" Extended Painted Steel

CAB
7010 Velocity FR Cab

BODY

WATER TANK
500 Gallon Poly Water Tank

COMPT, PUMPER, REAR
30.75" FF RollUp Rear Compt

COMPT, PUMPER, LEFT SIDE
161" RollUp Full Height & Depth Front & Rear

COMPT, PUMPER, RIGHT SIDE
161" RollUp Full Height & Depth Front & Rear

FIRE SUPPRESSION

PUMPHOUSE
56" Control Zone Side Mount

PUMP
2000 GPM Waterous CMU

CROSSLAYS, 1.50"
(2) 1.50" Standard Capacity

CROSSLAYS, 2.50"
(1) 2.50" Standard Capacity

SPEEDLAYS
Speedlays Not Required

GENERATOR
Harrison 6kW MSV Hydraulic Generator

Foam System
Foam System Not Required

Foam Cell
Foam Cell Not Required

Frontal Impact Protection

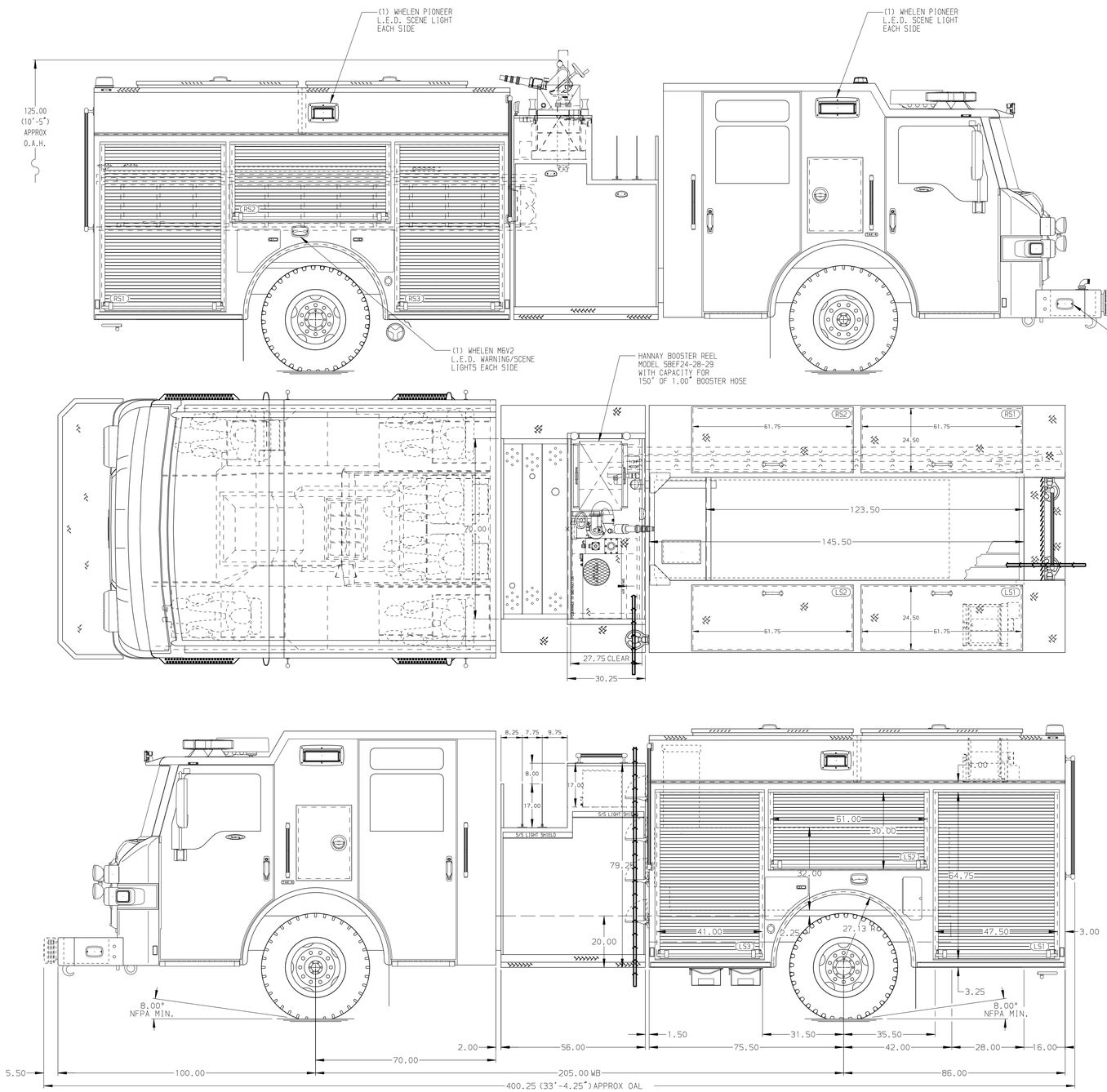

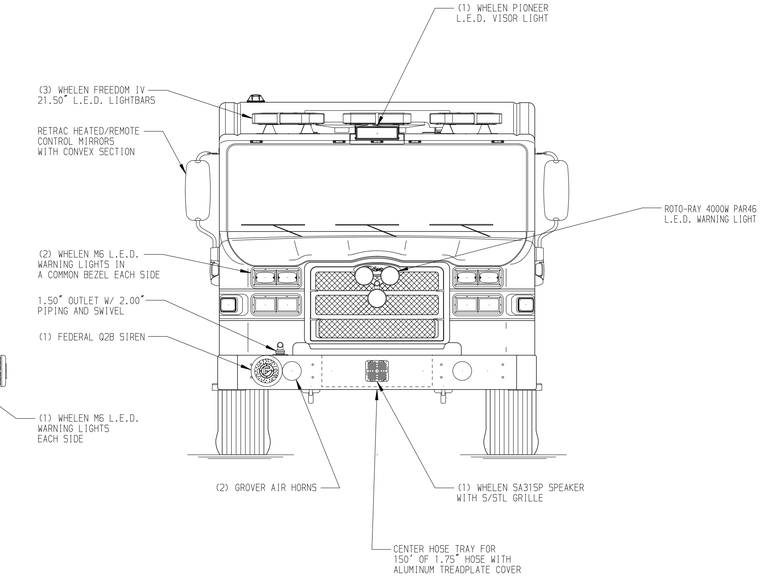

HOSEBED CAPACITY

BED 1
350' OF 3.00" D.J. POLY HOSE

BED 2
1000' OF 5.00" D.J. POLY HOSE

BED 3
350' OF 3.00" D.J. POLY HOSE

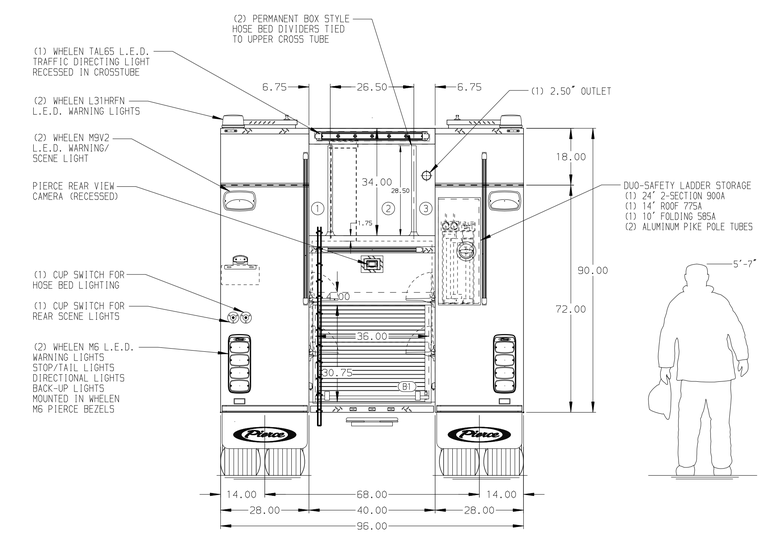

NOTE
DIMENSIONS SHOWN ARE APPROXIMATE AND ARE SUBJECT TO MINOR DEVIATIONS AS MAY OCCUR OR BE NECESSARY IN CONSTRUCTION.
MINOR DETAILS NOT SHOWN.

1. SHORELINE RECEPTACLE WITH KUSSMAUL SUPER AUTO-EJECT LOCATED IN DRIVERS STEP AREA
2. AIR INLET WITH DISCONNECT COUPLING IN THE DRIVER SIDE STEPWELL
3. BATTERY CHARGER LOCATED IN COMPARTMENT PER SHOP ORDER
4. BATTERY CHARGE INDICATOR LOCATED NEAR DRIVER SEAT RISER WITH BRACKET
5. NINE ADJUSTABLE SHELVES LOCATED PER SHOP ORDER
6. ONE FLOOR MOUNTED SLIDE-OUT TRAY IN COMPARTMENT PER SHOP ORDER
7. ONE SLIDE-OUT TOOLBOARD LOCATED PER SHOP ORDER
8. CIRCUIT BREAKER PANEL LOCATED PER SHOP ORDER
9. HANNAY CORD REEL MODEL E1618-17-18 W/ 200' OF 12/3 CABLE LOCATED PER SHOP ORDER
10. ONE VERTICAL PARTITION LOCATED PER SHOP ORDER
11. FOUR ZICO AIR BOTTLE HOLDERS LOCATED PER SHOP ORDER
12. TWO 120V 6-PLACE RECEPTACLE STRIPS LOCATED PER SHOP ORDER

CUSTOMER APPROVAL
APPROVED BY: _____
DATE: _____

REV	DATE	BY	CH
▽	-	-	-

CHASSIS DATA
MAKE: PIERCE
MODEL: ENFORCER

Pierce MANUFACTURING INC.

TITLE: Pierce Pumper Approval Drawing
FOR: South Salt Lake City Fire Department
DWG NO.: 37153AD

JOB NO.	37153
SCALE	1:24
DATE	
DRAWN BY	MMF 27JAN22
CHECKED BY	COL 27JAN22
SHEET SIZE	D
SHEET NO.	1 OF 1

View File Created 01-FEB-2022 06:59:26