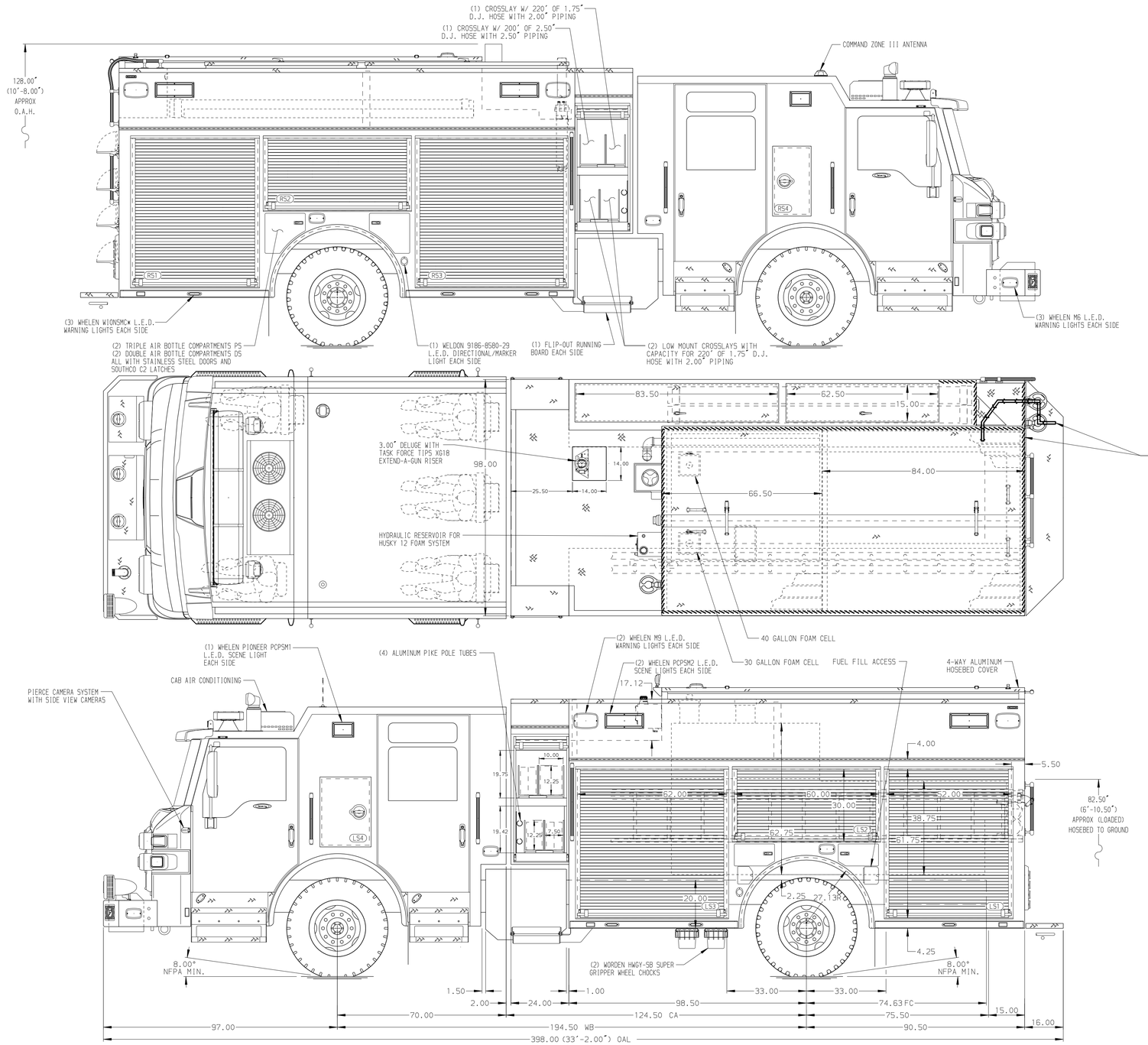

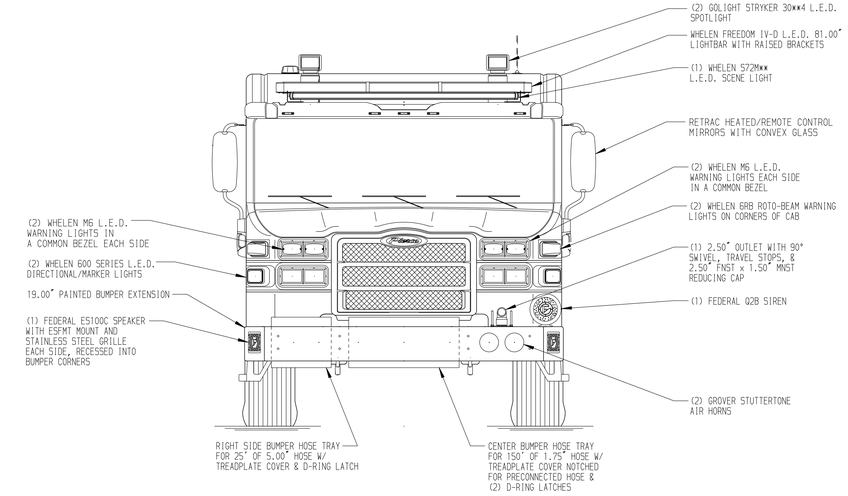

HOSEBED CAPACITIES

1. 500' OF 3.00" D.J. HOSE
2. 500' OF 3.00" D.J. HOSE
3. 1000' OF 5.00" D.J. HOSE
4. 400' OF 2.50" D.J. HOSE

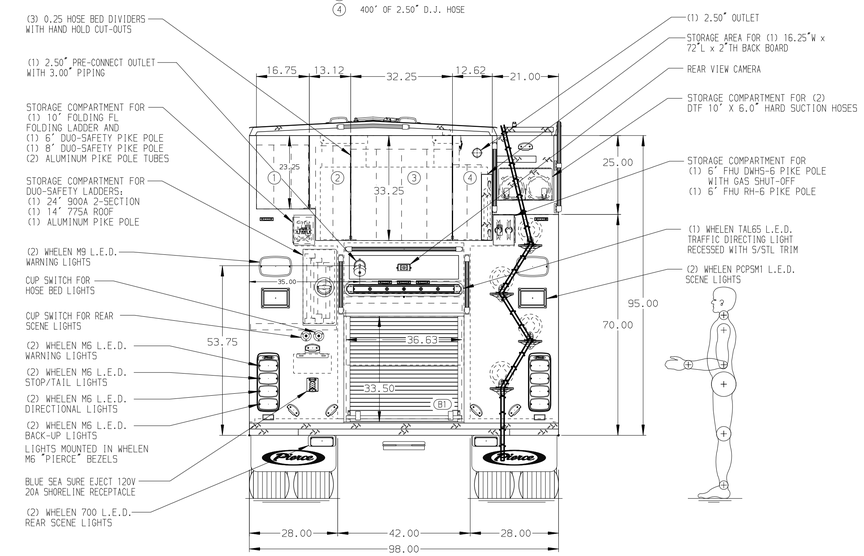

ALUMINUM BODY | MAXIMUM O.A.L. 398.00" | MAXIMUM O.A.H. 128.00" | SIDE ROLL AND FRONTAL IMPACT PROTECTION

NOTE

DIMENSIONS SHOWN ARE APPROXIMATE AND ARE SUBJECT TO MINOR DEVIATIONS AS MAY OCCUR OR BE NECESSARY IN CONSTRUCTION.
MINOR DETAILS NOT SHOWN.

1. AIR INLET/OUTLET WITH DISCONNECT FITTING LOCATED ON DS PUMP PANEL
2. VOGEL LUBE SYSTEM PUMP LOCATED PER SHOP ORDER
3. BATTERY CHARGER LOCATED IN PUMP PLUMBING AREA
4. BATTERY CHARGER INDICATOR LOCATED NEAR D.S. SEAT RISER WITH BRACKET
5. FOUR 40" AMDOR LUMABAR L.E.D. STRIPS INSTALLED UNDERNEATH HOSE BED COVER

REV	DATE	BY	CH
▽	-	-	-

CHASSIS DATA
MAKE: PIERCE
MODEL: VELOCITY

Pierce MANUFACTURING INC.

TITLE: 1500-D-930G WATER, 40 & 30G FOAM CELLS, 189" RESCUE (4) CROSSLAYS, DELUGE, HUSKY 12
FOR: CITY OF CHESAPEAKE CHESAPEAKE, VIRGINIA
DWG NO.: 37182AD-SH1

JOB NO.	37182
SCALE	1:24
DATE	
DRAWN BY	JUS 11MAR22
CHECKED BY	JBL 14MAR22
SHEET SIZE	D
SHEET NO.	1 OF 2

View File Created 14-MAR-2022 11:16:42