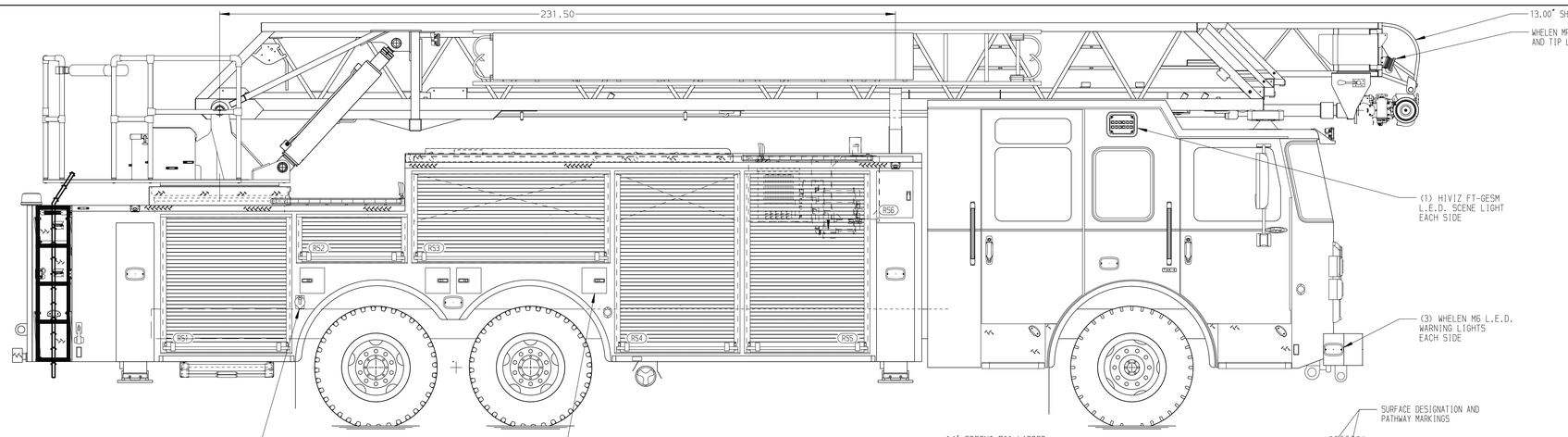

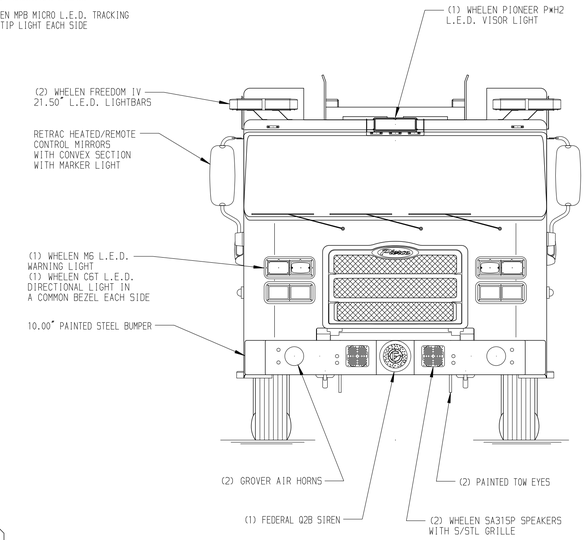

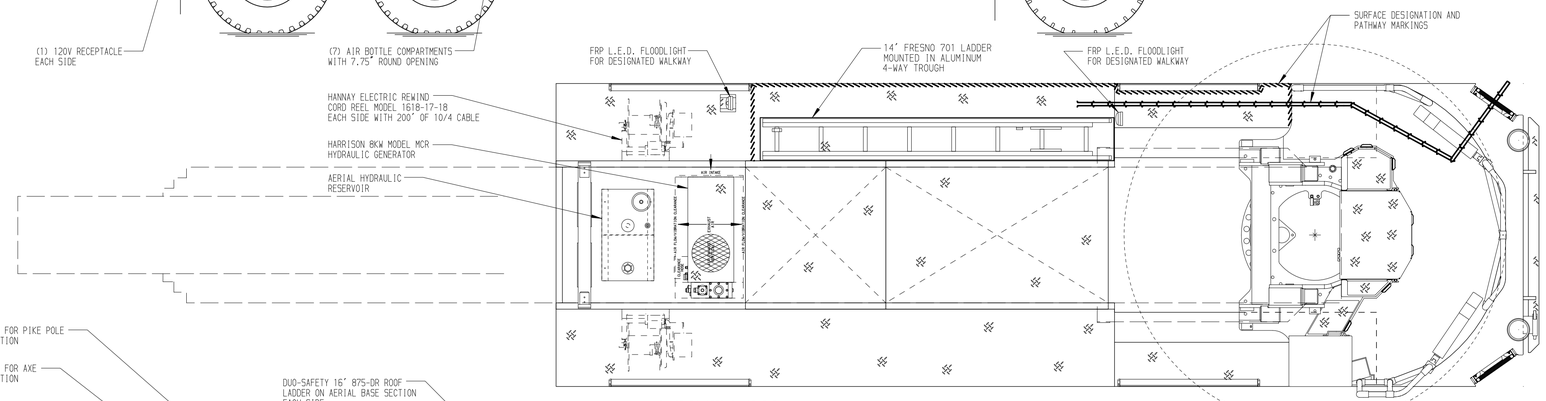

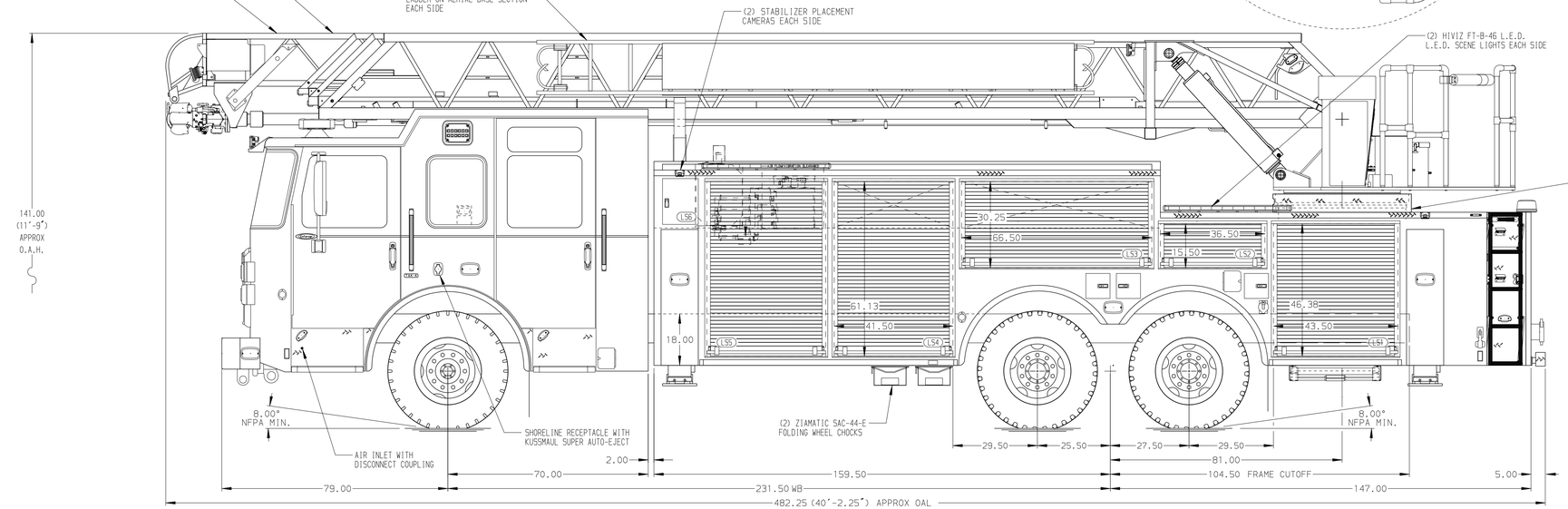

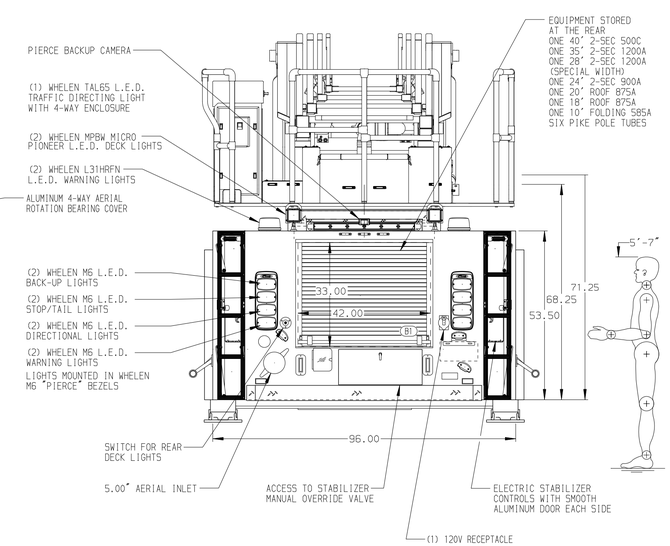

STAINLESS STEEL BODY

SIDE ROLL & FRONTAL IMPACT PROTECTION

NOTE

DIMENSIONS SHOWN ARE APPROXIMATE AND ARE SUBJECT TO MINOR DEVIATIONS AS MAY OCCUR OR BE NECESSARY IN CONSTRUCTION.
MINOR DETAILS NOT SHOWN.

1. BATTERY CHARGER LOCATED BEHIND DRIVER SEAT
2. BATTERY CHARGE INDICATOR LOCATED BEHIND DRIVER'S SEAT DISPLAYED THROUGH WINDOW
3. EIGHT ADJUSTABLE SHELVES IN COMPARTMENTS PER SHOP ORDER
4. SIX FLOOR MOUNTED SLIDE-OUT TRAYS IN COMPARTMENTS PER SHOP ORDER
5. CIRCUIT BREAKER PANEL IN COMPARTMENT PER SHOP ORDER
6. STABILIZERS WITH 12' SPREAD AND 18" GROUND PENETRATION
7. 120V POWER TO AERIAL TIP
8. 3.00" RAISED AERIAL PEDESTAL
9. LIFTING EYE RESCUE ATTACHMENT AT AERIAL TIP
10. TRIDENT FOLDING STEPS ON AERIAL DEVICE
11. 14.00" LIMITED RETRACTION REQUIRED

CUSTOMER APPROVAL

APPROVED BY: _____

DATE: _____

REV	DATE	BY	CH
1	12NOV21	TKA	THS

CHASSIS DATA
MAKE: PIERCE
MODEL: ENFORCER

Pierce MANUFACTURING INC.

TITLE: 100' HSL AERIAL LADDER & BODY ASSEMBLY
NO PUMP/NO TANK

FOR: PIERCE FIELD UNIT
APPLETON, WISCONSIN

DWG NO. 37193AD

JOB NO.	37193
SCALE	1:24
DATE	
DRAWN BY	COL 31AUG21
CHECKED BY	THS 03SEP21
SHEET SIZE	D
SHEET NO.	1 OF 1

View File Created 15-NOV-2021 11:25:19