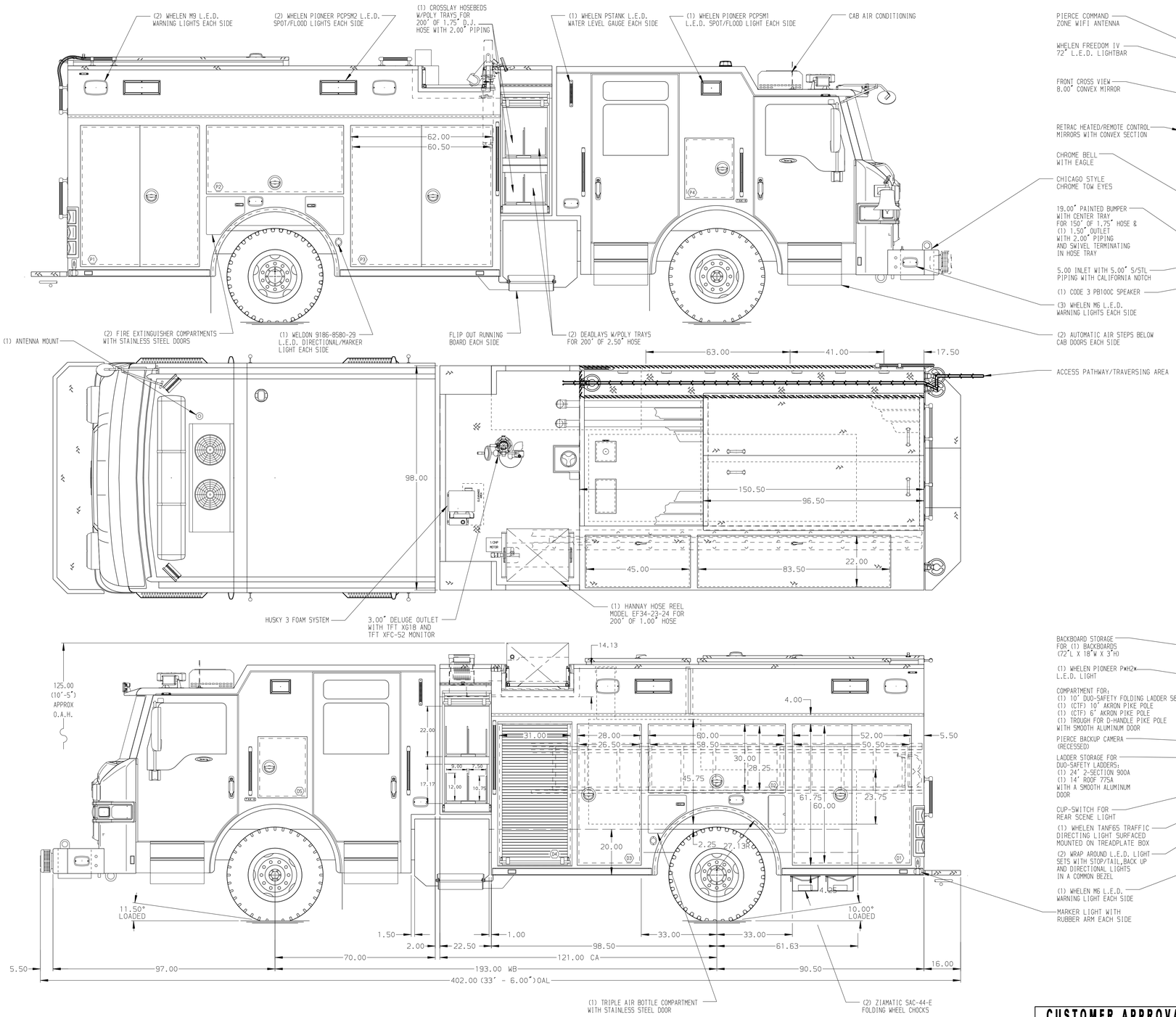

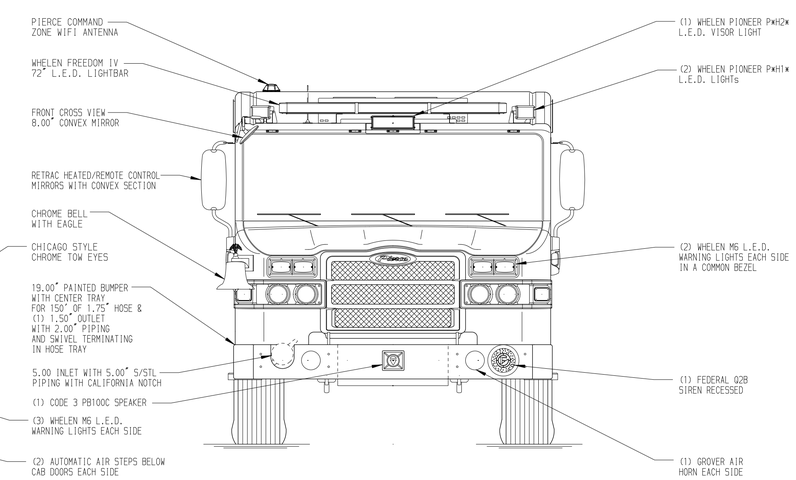

HOSEBED CAPACITIES

1. - 1000' OF 5.00" HOSE
2. - 800' OF 2.50" HOSE
3. - 300' OF 2.50" HOSE
4. - 200' OF 2.50" HOSE

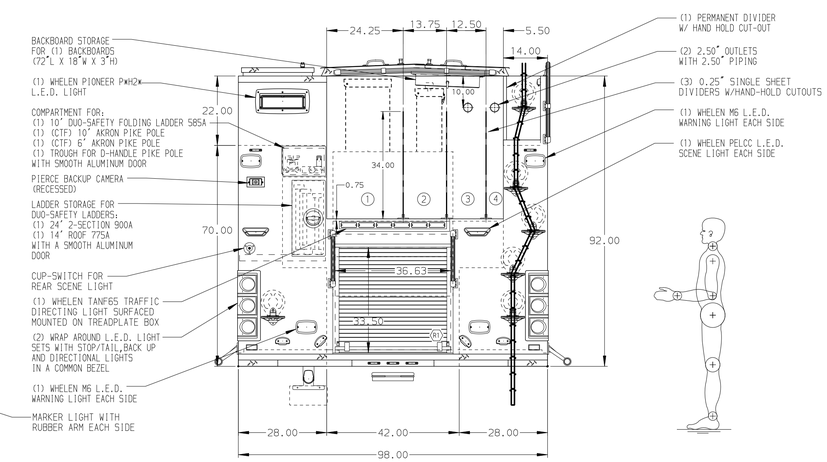

ALUMINUM BODY

SIDE ROLL AND FRONTAL IMPACT PROTECTION

NOTE

DIMENSIONS SHOWN ARE APPROXIMATE AND ARE SUBJECT TO MINOR DEVIATIONS AS MAY OCCUR OR BE NECESSARY IN CONSTRUCTION.
MINOR DETAILS NOT SHOWN.

1. AIR INLET W/DISCONNECT COUPLING LOCATED ON DRIVER'S SEAT BASE
2. AIR OUTLET WITH SHUT OFF VALVE LOCATED ON DRIVER'S SIDE PUMP PANEL
3. BATTERY CHARGER MOUNTED BEHIND DRIVER'S SIDE SEAT
4. BATTERY CHARGE INDICATOR LOCATED NEAR DRIVER'S SEAT RISER WITH BRACKET
5. 30A 125V SHORELINE RECEPTACLE LOCATED ON DRIVER'S SEAT BASE
6. SUB-FEED CIRCUIT BREAKER PANEL LOCATED ON DRIVER'S SEAT
7. REVERSED HINGED DOOR ON COMPARTMENT D3
8. S/STL SOUFFPLATE ON BOTTOM EDGE OF DOOR FRAMING OF COMPARTMENT LS1, LS2, RS1, RS2 & RS3
9. NINE ADJUSTABLE FULL WIDTH/DEPTH SHELVES LOCATED PER SHOP ORDER
10. ONE ADJUSTABLE TILT/SLIDE-OUT FULL WIDTH/DEPTH TRAY LOCATED PER SHOP ORDER
11. THREE FLOOR MOUNTED SLIDE-OUT TRAYS WITH 2.00" SIDES ILOCATED PER SHOP ORDER
12. ONE SWING-OUT ALUMINUM TOOL BOARD IN LOCATED PER SHOP ORDER
13. ONE VERTICAL BOLT-IN PARTITION BETWEEN COMPARTMENTS LS1/B1 & RS1/B1
14. PEGBOARD W/TRACK ON BACK WALL OF COMPARTMENT LS2 & RS3

REV	DATE	BY	CH
▽	-	-	-

CHASSIS DATA
MAKE: PIERCE
MODEL: VELOCITY FR

CUSTOMER APPROVAL
APPROVED BY:
DATE:

Pierce MANUFACTURING INC.

TITLE: 1500-D-500P W/20G FOAM CELL, 189" PUMPER PUC LHB (2)XLAYS, (2)BACKBOARDS, DELUGE, HUSKY 3
FOR: LAKE OSWEGO FIRE DEPARTMENT, LAKE OSWEGO, OREGON
DWG NO.: 37241AD

JOB NO.	37241
SCALE	1:24
DATE	
DRAWN BY	JWO
	24MAR22
CHECKED BY	CZA
	28MAR22
SHEET SIZE	D
SHEET NO.	1 OF 1

View File Created 28-MAR-2022 12:22:17