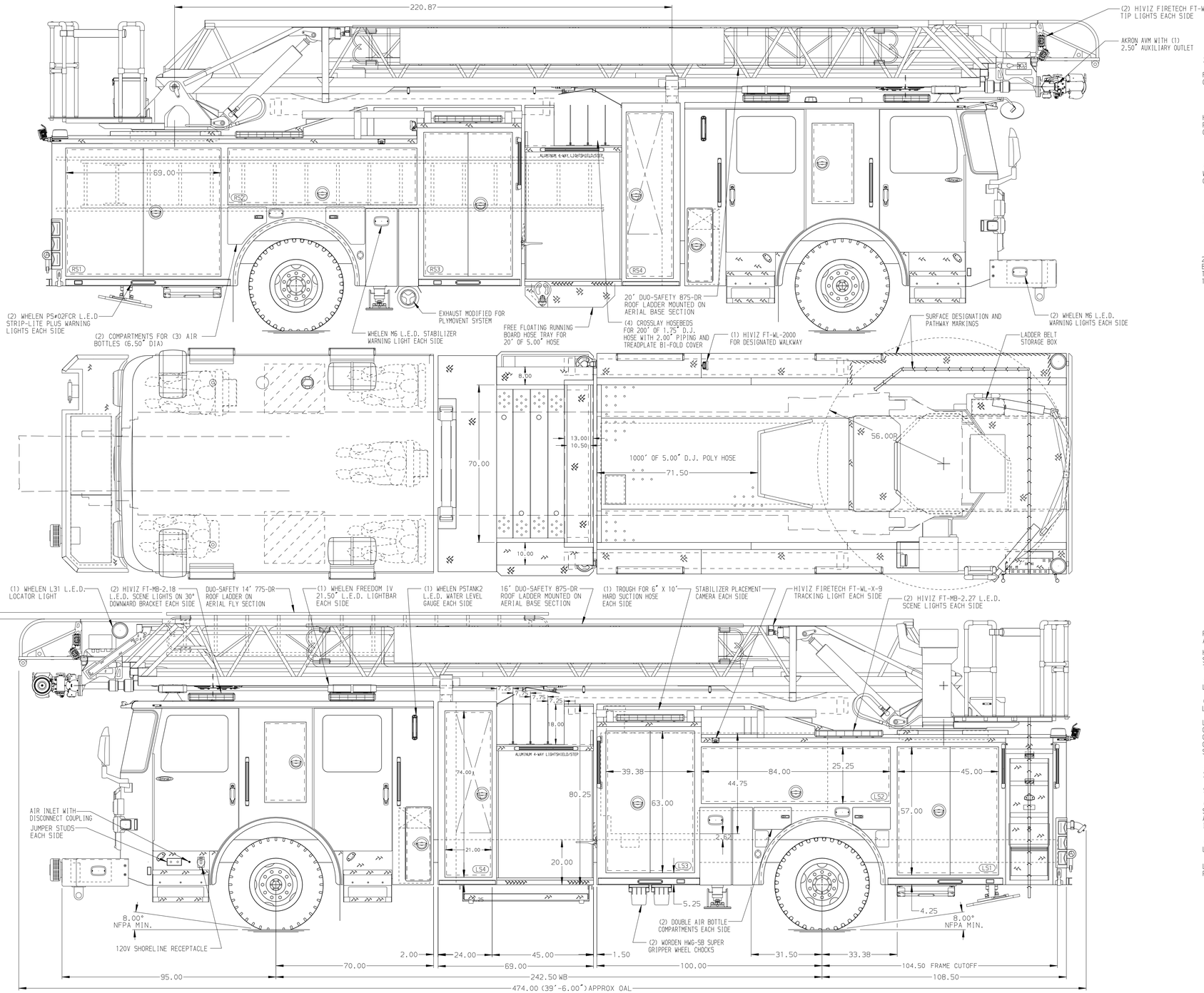

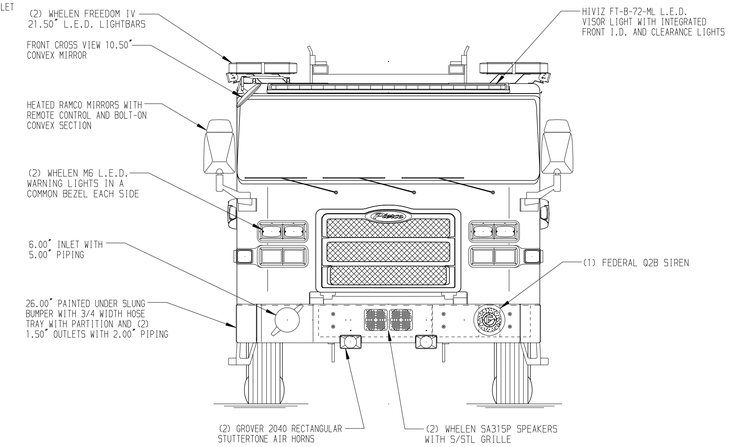

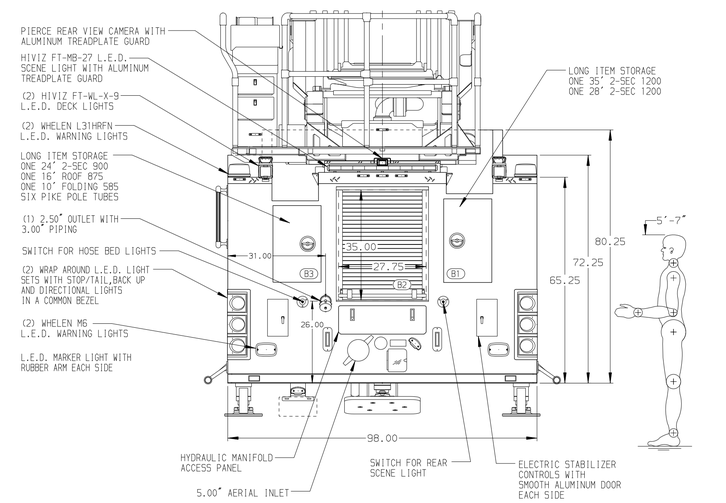

ALUMINUM BODY

NOTE

DIMENSIONS SHOWN ARE APPROXIMATE AND ARE SUBJECT TO MINOR DEVIATIONS AS MAY OCCUR OR BE NECESSARY IN CONSTRUCTION.
MINOR DETAILS NOT SHOWN.

1. BATTERY CHARGER LOCATED IN COMPARTMENTS PER ORDER
2. BATTERY CHARGER INDICATOR LOCATED ON DRIVER'S SEAT RISER
3. L.E.D. LIGHT STRIPS LOCATED IN HOSE BED PER ORDER
4. PULL STRAPA ON DOOR FOR TWO COMPARTMENTS PER ORDER
5. SIX ADJUSTABLE SHELVES IN COMPARTMENTS PER ORDER
6. TWO FLOOR MOUNTED SLIDE-OUT TRAYS IN COMPARTMENTS PER ORDER
7. ONE ADJUSTABLE VERTICAL PARTITION IN COMPARTMENT PER ORDER
8. PAC TRAC ON BACK WALL OF SIX COMPARTMENTS PER ORDER
9. SIX 120V DUPLEX RECEPTACLES LOCATED IN COMPARTMENTS PER ORDER
10. ONE CTECH CABINET IN COMPARTMENT PER ORDER
11. TRIDENT FOLDING STEPS ON AERIAL DEVICE
12. REMOTE LADDER CONTROLS AT AERIAL TIP
13. REMOTE LADDER CONTROLS AT PUMP PANEL
14. L.E.D. LIGHTING ON AERIAL LADDER SECTIONS
15. DC POWER TO AERIAL TIP
16. FIRE RESEARCH 3-WAY INTERCOM SYSTEM BETWEEN AERIAL TIP,PUMP PANEL AND TURNTABLE
17. LIFTING EYE ROPE RESCUE ATTACHMENT AT AERIAL TIP
18. 1500 GPM HIGH FLOW WATERWAY
19. AERIAL LIMITED RETRACTION NOT REQUIRED
20. MOUNTING BRACKETS FOR PIKE POLE AT AERIAL FLY SECTION
21. TWO BACKUP STYLE CAMERAS LOCATED ON AERIAL ERGRESS PER ORDER

CUSTOMER APPROVAL

APPROVED BY: _____

DATE: _____

REV	DATE	BY	CH
▽	-	-	-

CHASSIS DATA

MAKE: PIERCE

MODEL: ENFORCER

Pierce MANUFACTURING INC.

TITLE: 107' ASCENDANT AERIAL LADDER AND BODY ASSEMBLY
500 GALLON WATER TANK

FOR: VILLAGE OF FAYETTEVILLE FIRE DEPARTMENT
FAYETTEVILLE, NEW YORK

DWG NO.: 37254AD

JOB NO.	SCALE	DRAWN BY	CHECKED BY	SHEET SIZE	SHEET NO.
37254	1:24	SHU	NDA	D	1 OF 1

DATE: 16MAR22 / 21MAR22

View File Created 22-MAR-2022 07:02:01