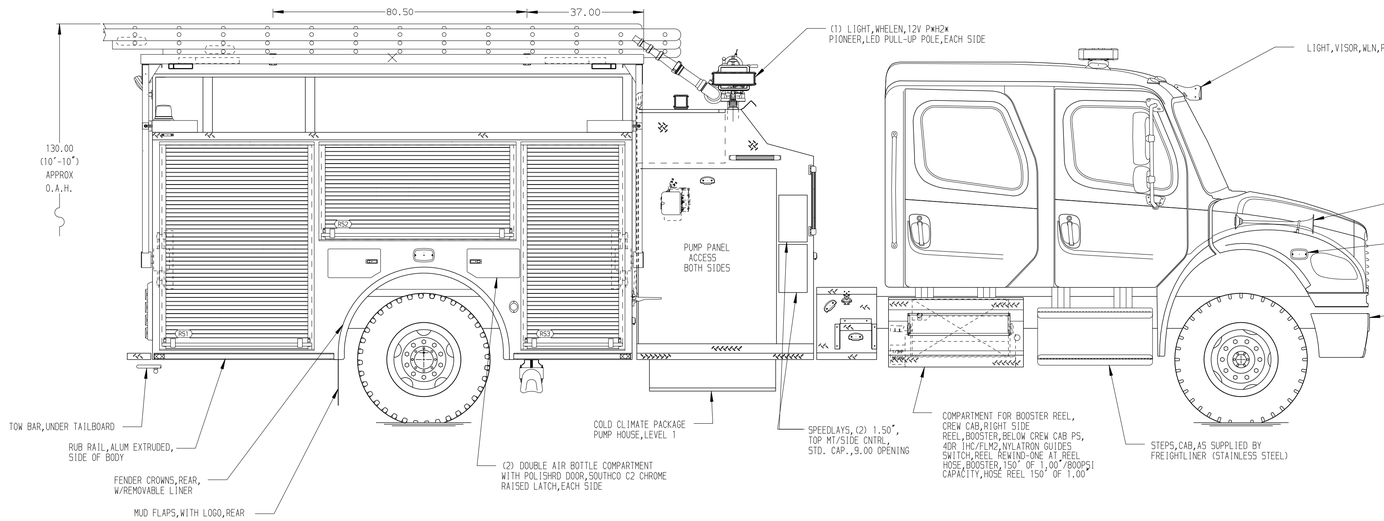


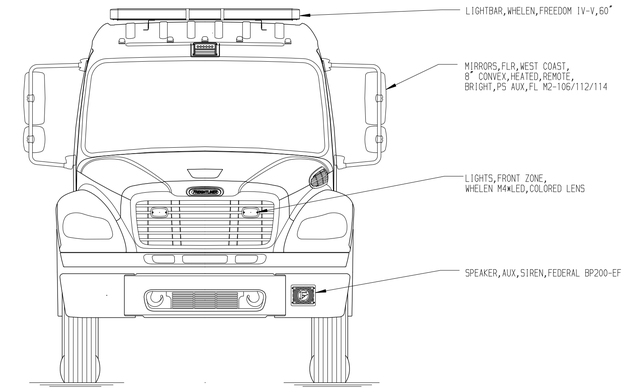


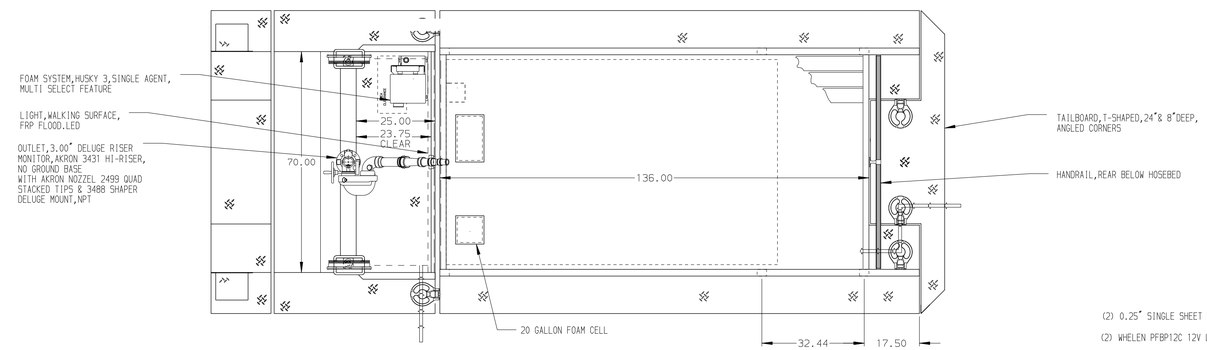


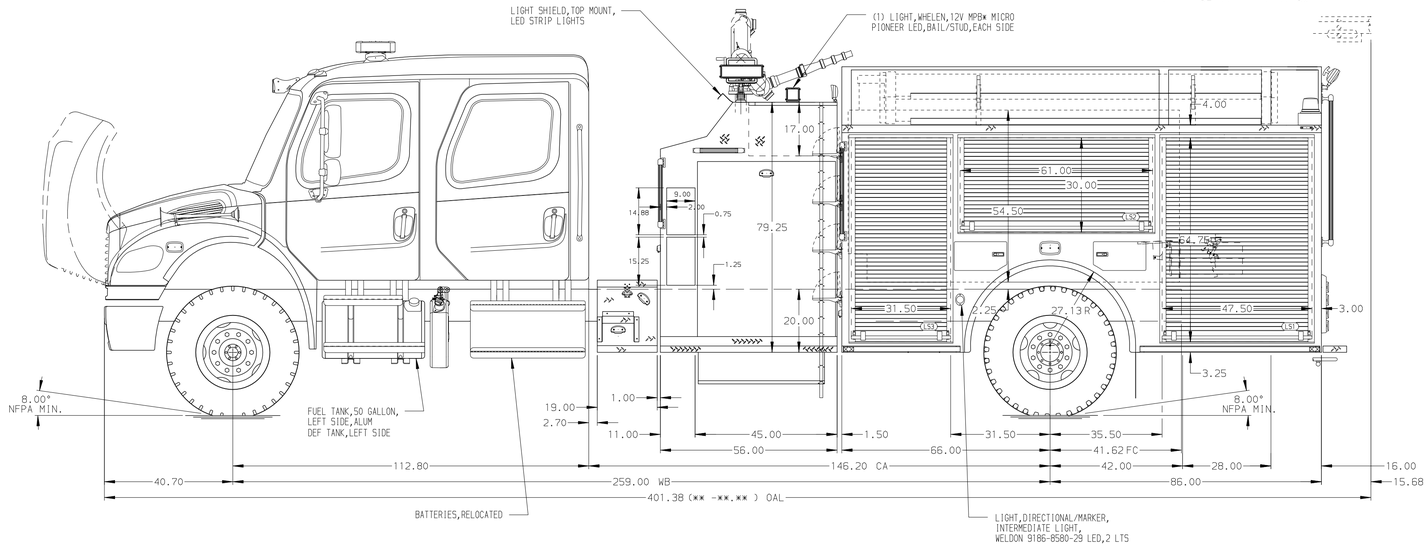


HOSEBED CAPACITIES

1. 250' OF 2.50" D.J. HOSE
2. OPEN
3. 250' OF 2.50" D.J. HOSE

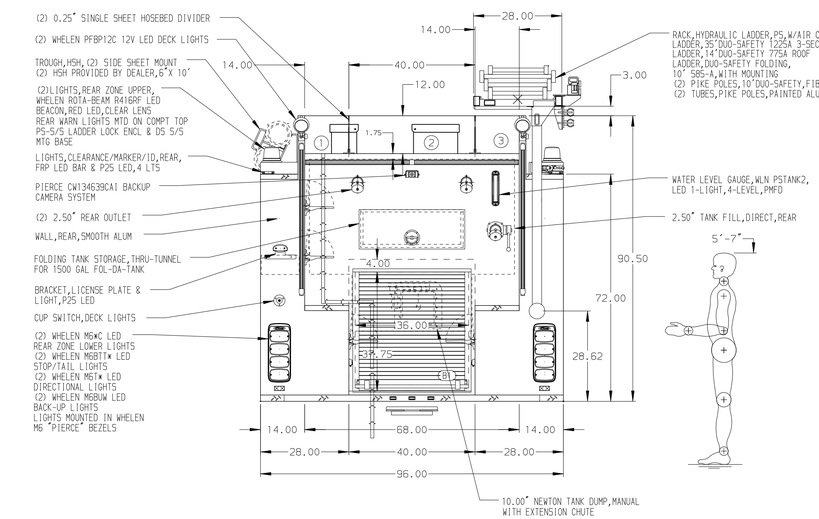


ALUMINUM BODY

NOTE

DIMENSIONS SHOWN ARE APPROXIMATE AND ARE SUBJECT TO MINOR DEVIATIONS AS MAY OCCUR OR BE NECESSARY IN CONSTRUCTION.
MINOR DETAILS NOT SHOWN.

| REV | DATE | BY | CH |
|---|---|---|---|
| ▽ | - | - | - |

| | |
|---|---|
| CHASSIS DATA | |
| MAKE | FL |
| MODEL | M2-106 |
| TITLE | 1250-D-1000P,20 FOAM,152",LS&RS FULL HEIGHT FDLER 45"TOP MNT W/19"WLKWY,(2)1.5"SPDLAYS,HYD LADDER RACK |
| FOR | THORNTON IA THORNTON, IOWA |
| DWG NO. | 37287AD |

**Pierce MANUFACTURING INC.**

| | |
|---|---|
| JOB NO. | 37287 |
| SCALE | 1:24 |
| DATE | |
| DRAWN BY | JLA |
| | 28MAR22 |
| CHECKED BY | RWI |
| | 29MAR22 |
| SHEET SIZE | D |
| SHEET NO. | 1 OF 1 |

View File Created 29-MAR-2022 11:48:30