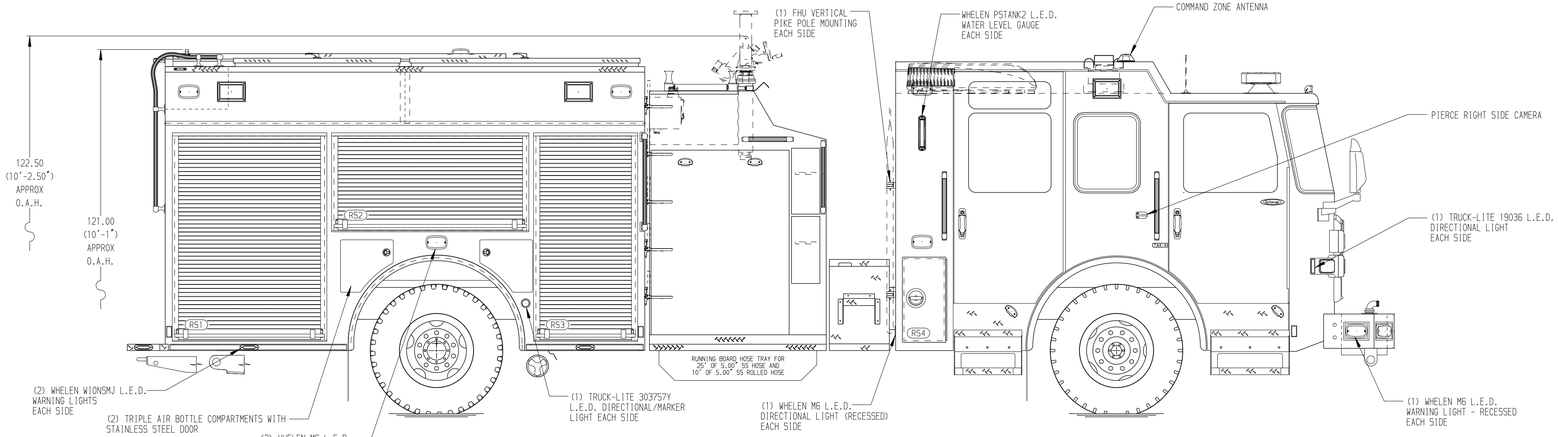

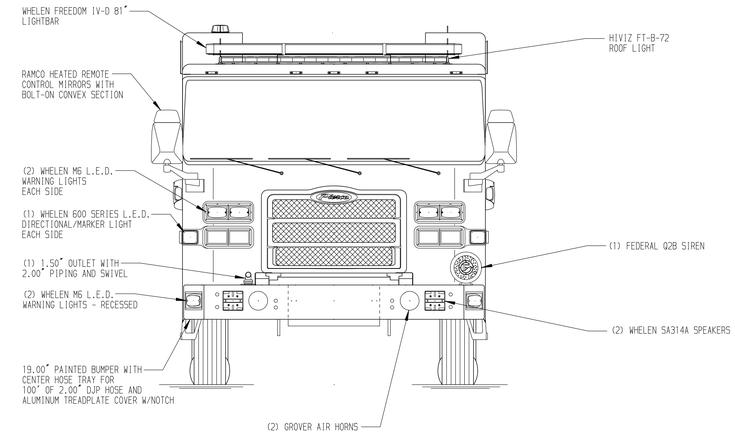

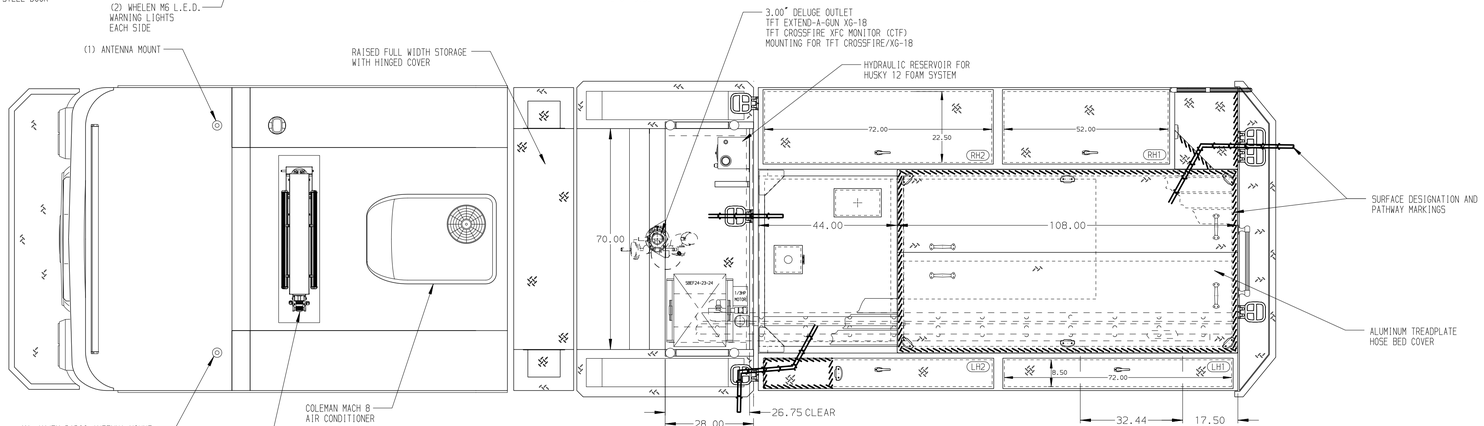

HOSEBED CAPACITIES

1 - 400' OF 2.50" D.J. POLY HOSE
2 - 1000' OF 5.00" L.D.H. HOSE
3 - (2) 100' OF 2.00" HOSE PACKS IN A POLY TRAY
4 - 375' OF 2.50" D.J. POLY HOSE

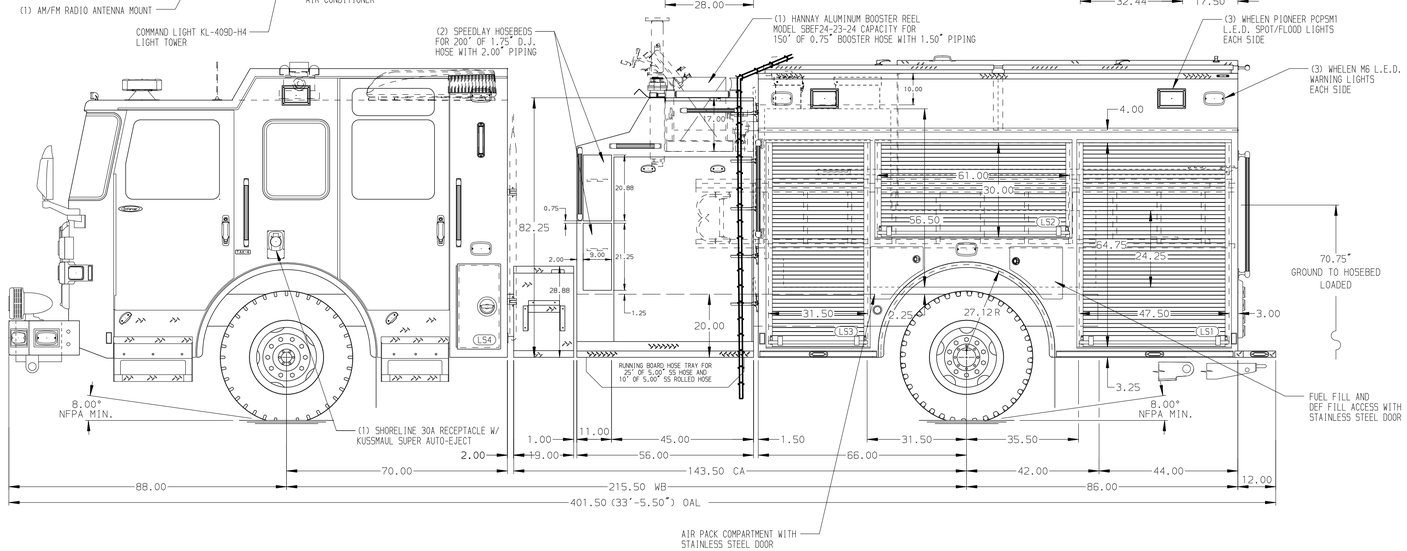

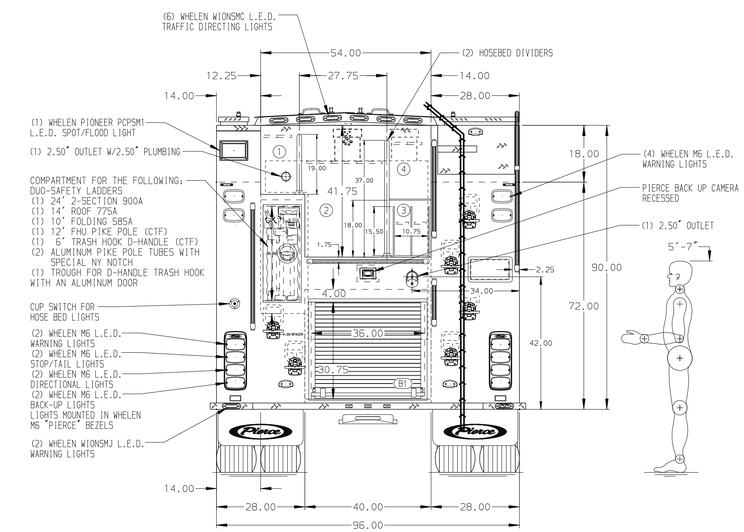

ALUMINUM BODY

NOTE

DIMENSIONS SHOWN ARE APPROXIMATE AND ARE SUBJECT TO MINOR DEVIATIONS AS MAY OCCUR OR BE NECESSARY IN CONSTRUCTION.
MINOR DETAILS NOT SHOWN.

1. WHEEL CHOCKS AND MOUNTING BRACKETS PROVIDED BY CUSTOMER
2. AIR INLET/OUTLET MILTON D FEMALE FITTING LOCATED PER SHOP ORDER
3. REMOTE AIR TANK DRAIN LOCATED PER SHOP ORDER
4. BATTERY CHARGER LOCATED BEHIND DRIVER'S SEAT
5. BATTERY CHARGER INDICATOR LOCATED ON DRIVER'S SEAT RISER
6. SUB FEED BREAKER BOX LOCATED BEHIND DRIVER'S SEAT
7. DUAL L.E.D. LIGHT STRIPS LOCATED BELOW HOSE BED COVER
8. DRIP PAN GUARD FOR ROLL-UP DOOR LOCATED ON ALL COMPARTMENTS WITH ROLL UP DOORS
9. DUAL L.E.D. LIGHT STRIPS ON EACH SIDE OF ALL COMPARTMENTS WITH ROLL UP DOORS
10. L.E.D. LIGHT STRIPS IN HATCH COMPARTMENTS
11. SIX FULL WIDTH/DEPTH ADJUSTABLE SHELVES LOCATED PER SHOP ORDER
12. ONE SLIDE-OUT ADJUSTABLE TRAY LOCATED PER SHOP ORDER
13. TWO CABLE RELEASE LATCHES WITH SINGLE HAND OPERATION FOR TRAYS LOCATED PER SHOP ORDER
14. TWO TILT/SLIDE-OUT ADJUSTABLE TRAYS LOCATED PER SHOP ORDER
15. THREE FLOOR MOUNTED SLIDE-OUT FULL WIDTH/FULL DEPTH TRAYS LOCATED PER SHOP ORDER
16. ONE FLOOR MOUNTED SLIDE-OUT TRAY LOCATED PER SHOP ORDER
17. TWO SLIDE-OUT ALUMINUM TOOL BOARDS LOCATED PER SHOP ORDER
18. PARTITION BETWEEN COMPARTMENTS LS1/B1 AND RS1/B1
19. ONE VERTICAL DIVIDER IN HATCH LOCATED PER SHOP ORDER
20. XANTREX INVERTER LOCATED PER SHOP ORDER
21. ONE 120V DUPLEX RECEPTACLE STRIP LOCATED PER SHOP ORDER
22. ONE 120V WEATHERPROOF RECEPTACLE LOCATED PER SHOP ORDER

REV	DATE	BY	CH
▽	-	-	-

CHASSIS DATA
MAKE: PIERCE
MODEL: ENFORCER

CUSTOMER APPROVAL
APPROVED BY:
DATE:

Pierce MANUFACTURING INC.

TITLE: 1500-D-525P, 500G WATER, 25G FOAM, 152" PUMPER BODY (2) SPEEDLAYS, DELUGE, HUSKY 12 FOAM SYSTEM
FOR: DENTON FIRE DEPARTMENT, DENTON, TEXAS
DWG NO.: 37288AD

JOB NO.	37288
SCALE	1:24
DATE	
DRAWN BY	JJB
	12APR22
CHECKED BY	WKL
	25APR22
SHEET SIZE	D
SHEET NO.	1 OF 1

View File Created 25-APR-2022 13:11:24