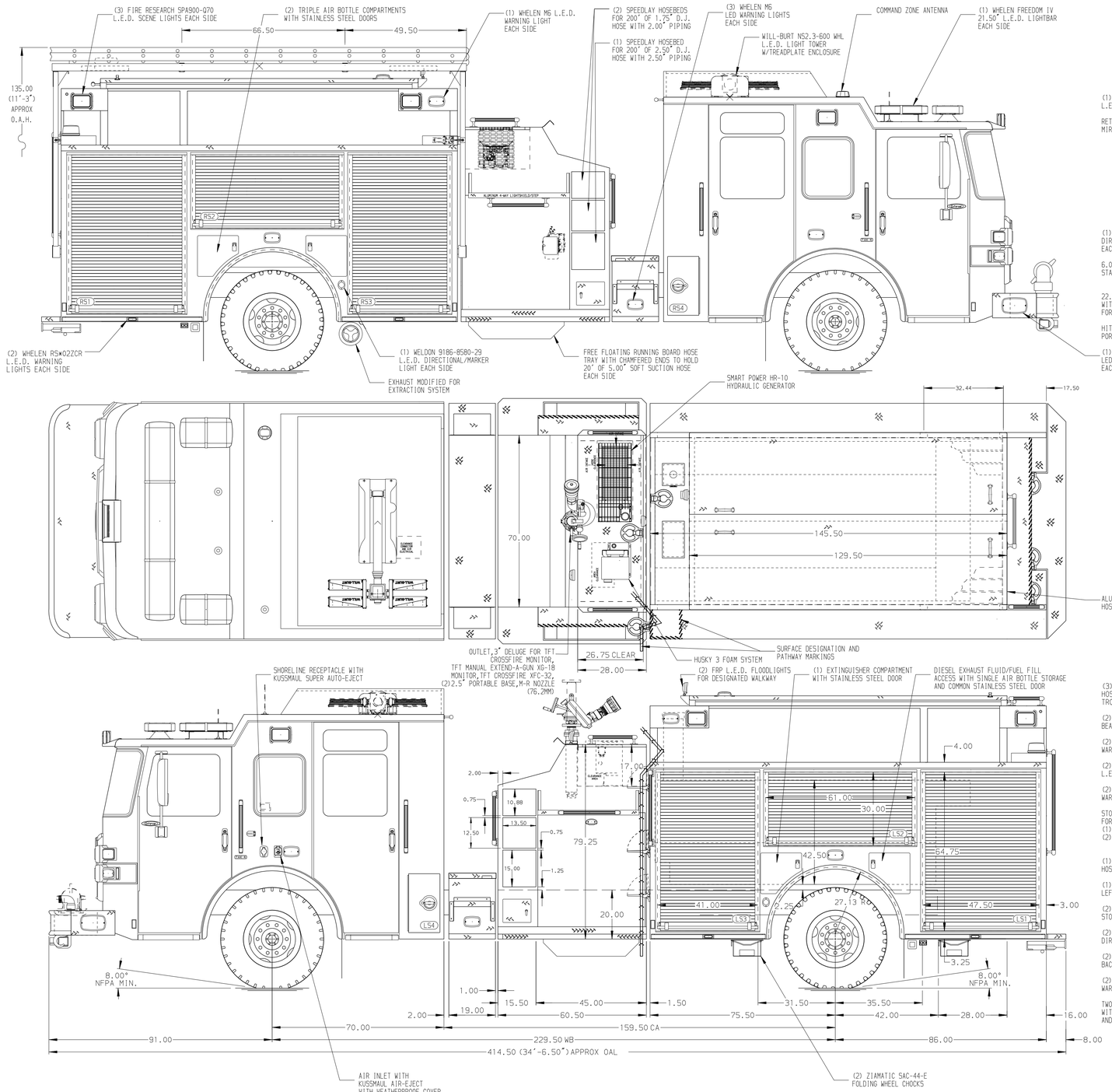

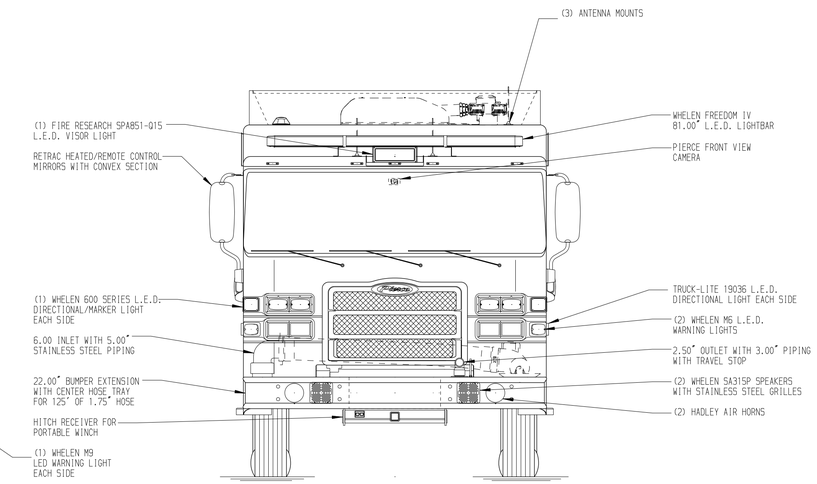

HOSEBED CAPACITIES

1. 500' OF 3.00" DJ HOSE
2. 1500' OF 5.00" DJ HOSE
3. 500' OF 3.00" DJ HOSE

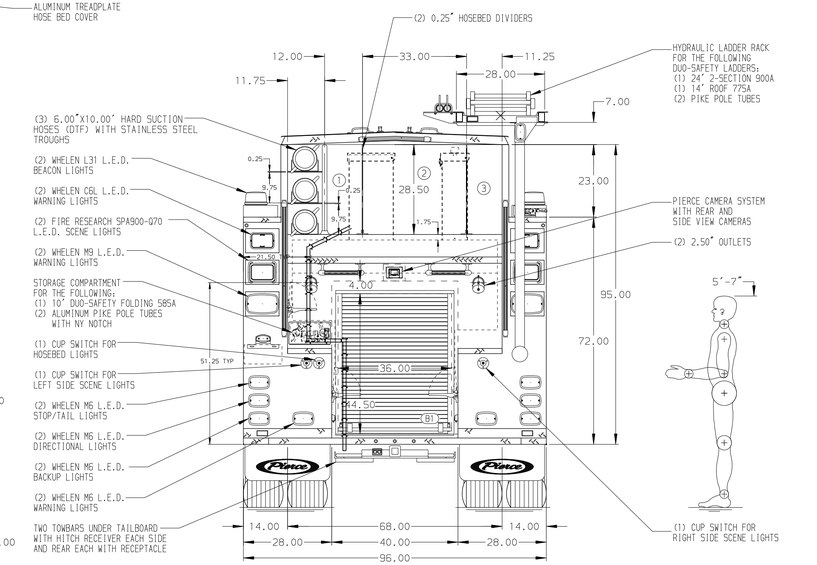

ALUMINUM BODY

SIDE ROLL AND FRONTAL IMPACT PROTECTION

NOTE

DIMENSIONS SHOWN ARE APPROXIMATE AND ARE SUBJECT TO MINOR DEVIATIONS AS MAY OCCUR OR BE NECESSARY IN CONSTRUCTION.
MINOR DETAILS NOT SHOWN.

1. AIR OUTLET WITH SHUT OFF VALVE IN DRIVER SIDE PUMP PANEL
2. BATTERY CHARGER LOCATED BEHIND DRIVER'S SEAT
3. BATTERY CHARGER INDICATOR BEHIND DRIVER'S SEAT DISPLAYED THROUGH WINDOW
4. DUAL L.E.D. LIGHT STRIPS LOCATED IN HOSE BED
5. S/STL SCUFFPLATE AROUND FUEL FILL OPENING
6. SEVEN DRIP PAN GUARDS FOR ROLL-UP DOORS LOCATED PER SHOP ORDER
7. EIGHT FULL WIDTH/DEPTH ADJUSTABLE SHELVES IN COMPARTMENTS PER SHOP ORDER
8. FOUR FLOOR MOUNTED SLIDE-OUT TRAYS IN COMPARTMENTS PER SHOP ORDER
9. ONE SWING-OUT ALUMINUM TOOL BOARD IN COMPARTMENT PER SHOP ORDER
10. ADJUSTABLE TOOLBOARD MOUNTED TO SLIDE-OUT TRAY IN COMPARTMENT PER SHOP ORDER
11. SIX ALUMINUM PEGBOARDS ON BACK WALL OF COMPARTMENTS PER SHOP ORDER
12. CIRCUIT BREAKER PANEL IN COMPARTMENT PER SHOP ORDER

REV	DATE	BY	CH
▽	-	-	-

CUSTOMER APPROVAL
APPROVED BY:
DATE:

Pierce MANUFACTURING INC.

CHASSIS DATA	TITLE	2000-D-1020P, 1000G WATER W/20G FOAM,161" FH FDLER RS HYDR LADDER RACK, GENERATOR, 45" TOP MOUNT	JOB NO. 37333
MAKE PIERCE	FOR	NEW BREMEN FD NEW BREMEN, OHIO	SCALE 1:24 / DATE
MODEL ENFORCER	DWG NO.	37333AD	DRAWN BY JUS / 20APR22
			CHECKED BY CDU / 22APR22
			SHEET SIZE D / SHEET NO. 1 OF 1

View File Created 22-APR-2022 14:59:11