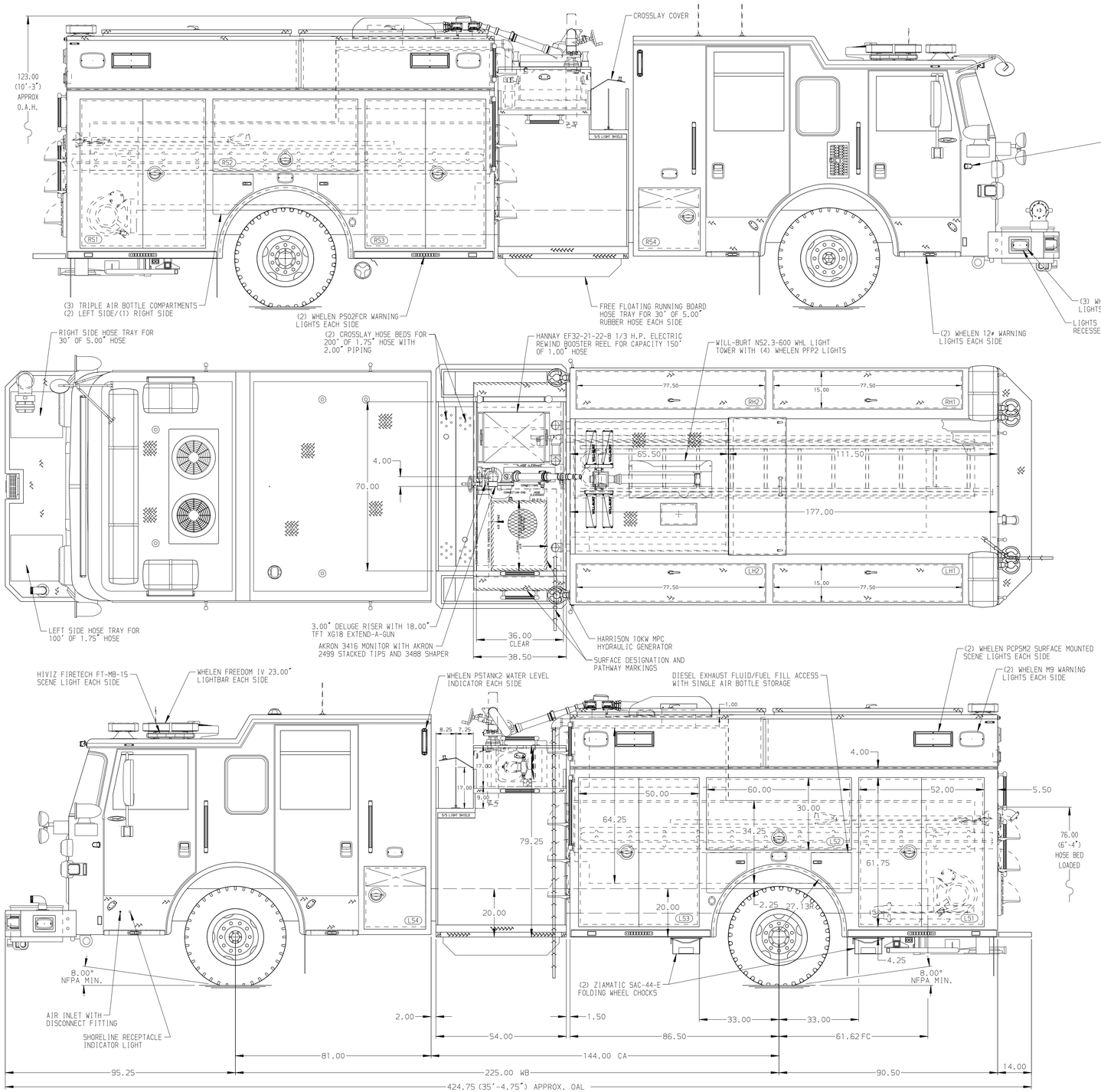

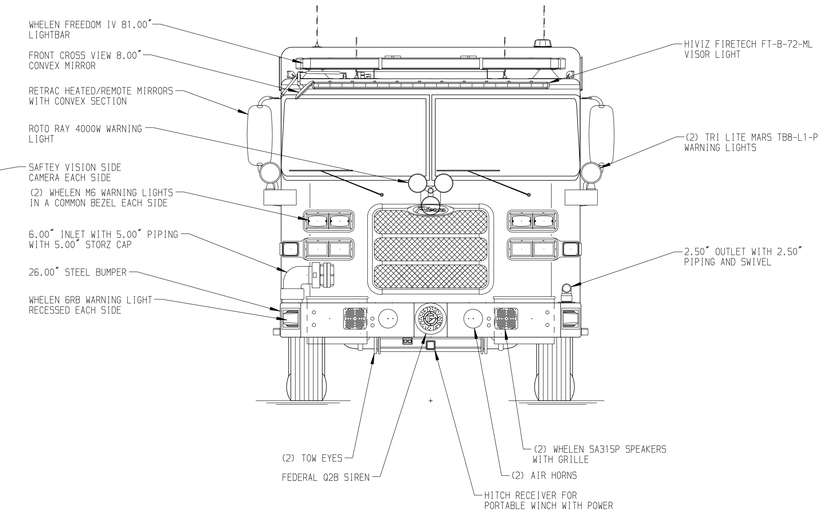

HOSEBED CAPACITIES

1. 200' OF 2.50" D.J. POLY HOSE (PRECONNECTED)
2. 250' OF 3.00" D.J. POLY HOSE
3. 1500' OF 5.00" RUBBER HOSE
4. 300' OF 1.75" D.J. POLY HOSE (PRECONNECTED)
5. 200' OF 2.50" D.J. POLY HOSE (PRECONNECTED)

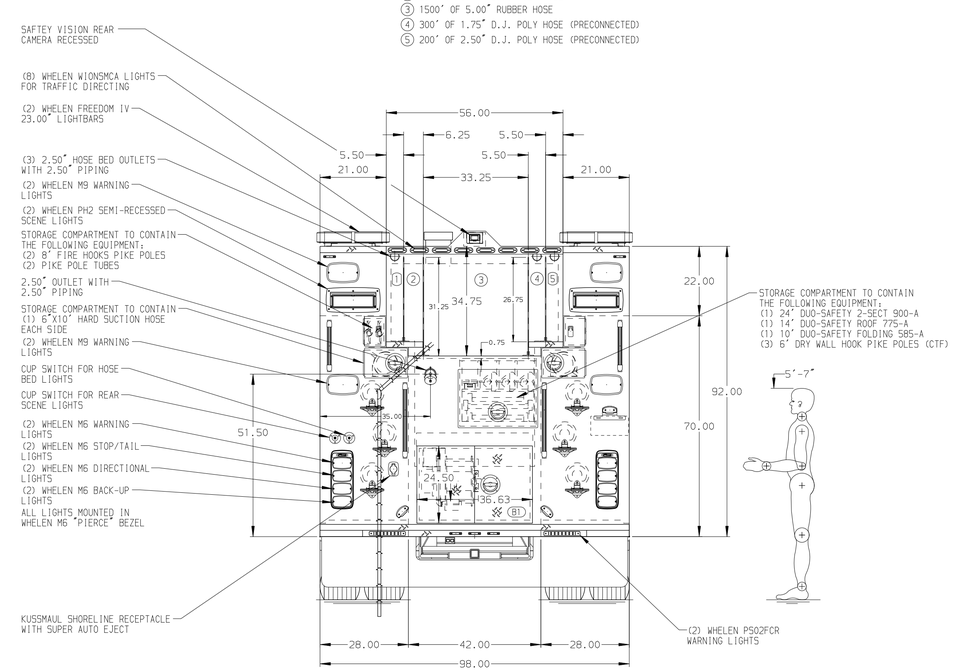

ALUMINUM BODY

NOTE

DIMENSIONS SHOWN ARE APPROXIMATE AND ARE SUBJECT TO MINOR DEVIATIONS AS MAY OCCUR OR BE NECESSARY IN CONSTRUCTION.
MINOR DETAILS NOT SHOWN.

1. AIR OUTLET WITH SHUT OFF VALVE LOCATED PER ORDER
2. BATTERY CHARGER LOCATED PER ORDER
3. BATTERY CHARGER INDICATOR LOCATED PER ORDER
4. ONE RECEPTACLE BOX WITH (4) RECEPTACLES IN CAB LOCATED PER ORDER
5. ONE 120V DUPLEX RECEPTACLE LOCATED IN CAB PER ORDER

REV	DATE	BY	CH
7	22FEB23	BST	PHA
6	10FEB23	BST	PHA
5	14DEC22	BST	PHA
4	12DEC22	BST	PHA
3	08SEP22	BST	MGE
2	28APR22	BST	MGE

CHASSIS DATA
MAKE: PIERCE
MODEL: ARROW XT

Pierce MANUFACTURING INC.

TITLE: 2000-D-750P,177" HDRP 3G BODY,LADDERS THRU TANK 54" SIDE CONTROL,DELUGE,LIGHT TOWER
FOR: BOROUGH OF OLD TAPPAN OLD TAPPAN, NJ
DWG NO.: 37352AD-SH1

JOB NO.	37352
SCALE	1:24
DATE	
DRAWN BY	BST 13APR22
CHECKED BY	MGE 14APR22
SHEET SIZE	D
SHEET NO.	1 OF 2

View File Created 17-MAR-2023 08:52:41