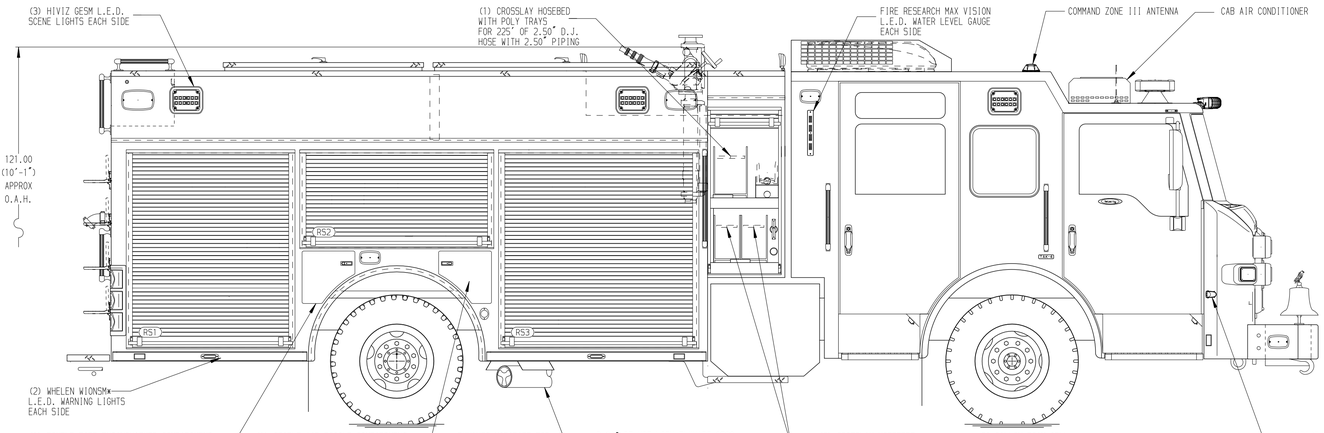

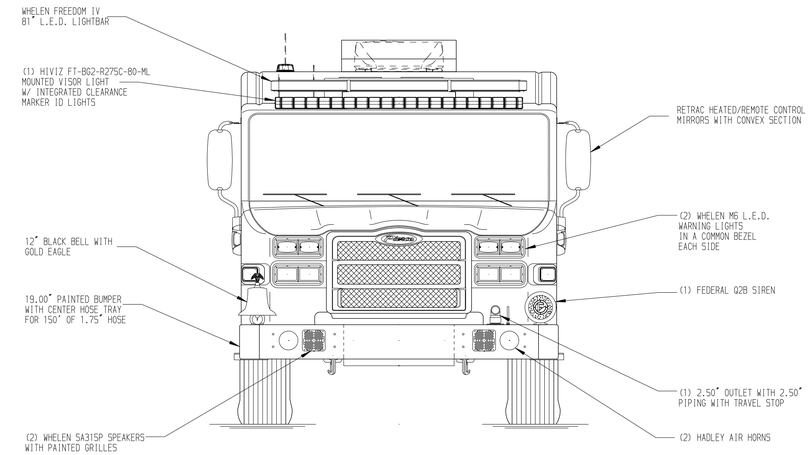

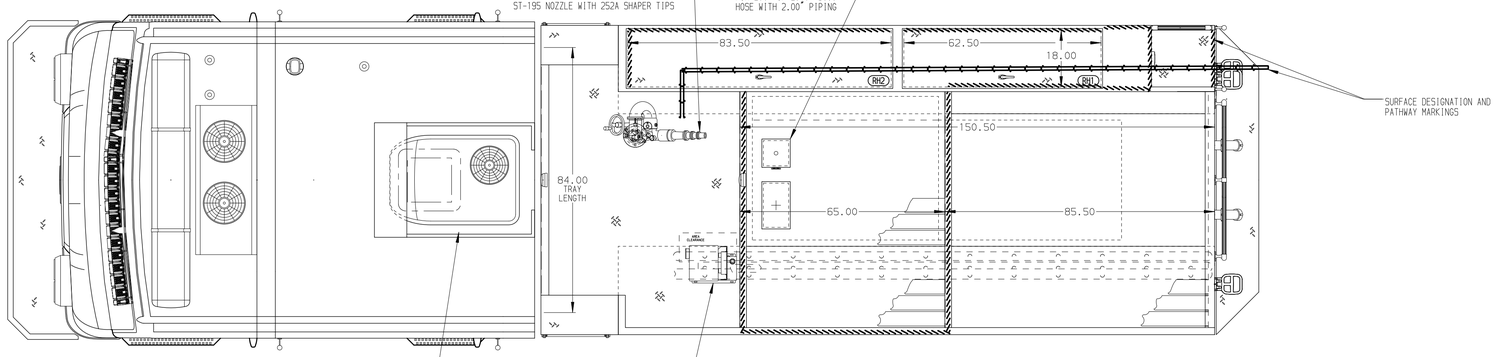

HOSEBED CAPACITIES

1. - 400' OF 1.75" D.J. POLY HOSE
2. - 1000' OF 5.00" D.J. POLY HOSE
3. - 400' OF 2.50" D.J. POLY HOSE
4. - 200' OF 2.50" D.J. POLY HOSE

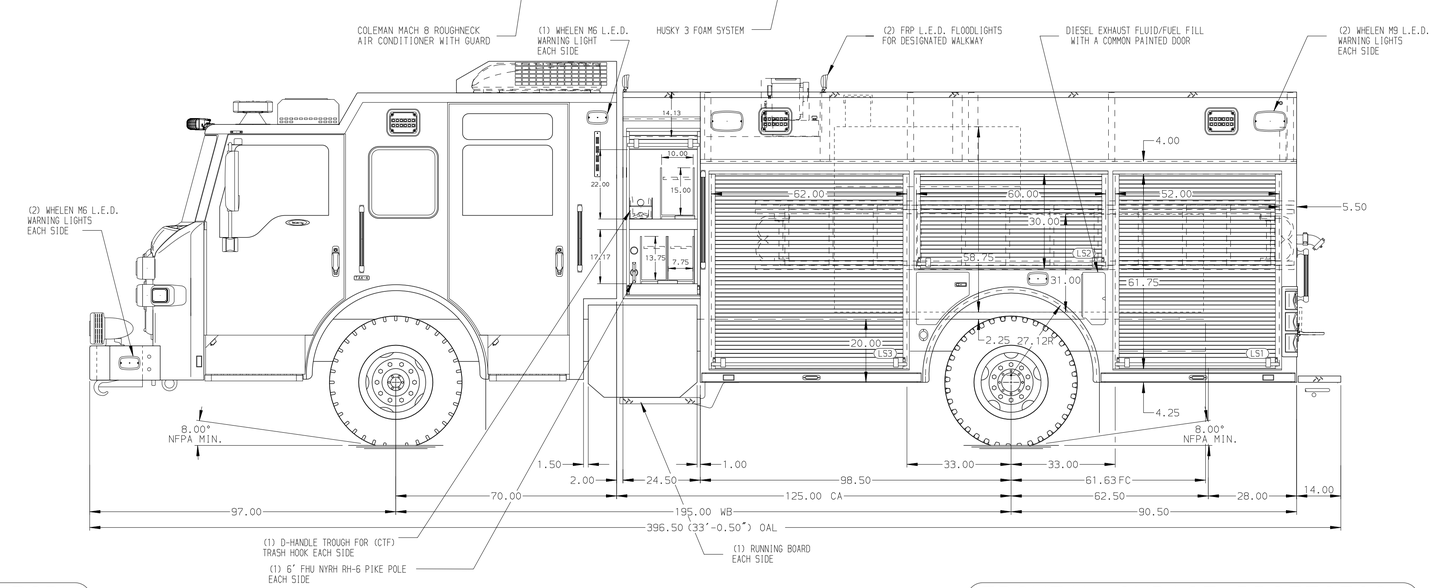

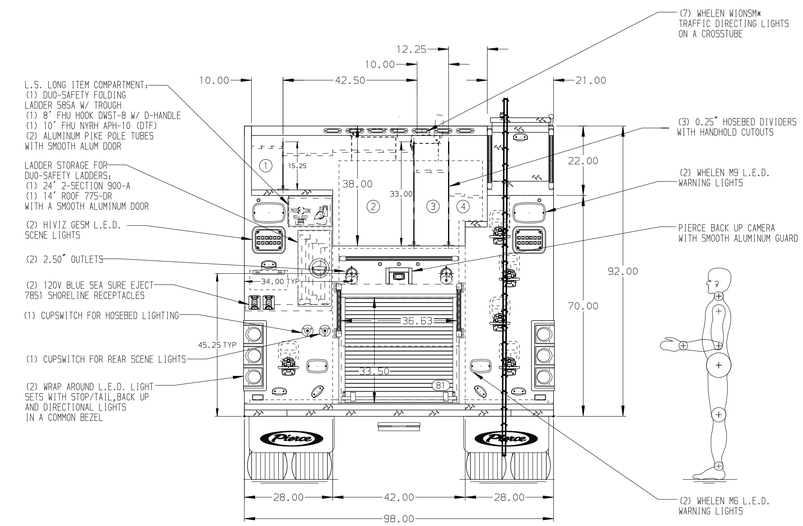

ALUMINUM BODY

FRONTAL IMPACT PROTECTION

NOTE

DIMENSIONS SHOWN ARE APPROXIMATE AND ARE SUBJECT TO MINOR DEVIATIONS AS MAY OCCUR OR BE NECESSARY IN CONSTRUCTION.
MINOR DETAILS NOT SHOWN.

1. AIR INLET/OUTLET WITH DISCONNECT FITTING ON D.S. PUMP PANEL
2. BATTERY CHARGER LOCATED PER SHOP ORDER
3. BATTERY CHARGER INDICATOR LOCATED NEAR DRIVER'S SEAT RISER WITH BRACKET
4. DUAL L.E.D. LIGHT STRIPS LOCATED IN HOSE BED
5. ELASTIC PULL STRAP FOR DOORS PER SHOP ORDER
6. SIX FULL WIDTH/DEPTH ADJUSTABLE SHELVES LOCATED PER SHOP ORDER
7. THREE FLOOR MOUNTED SLIDE-OUT TRAYS LOCATED PER SHOP ORDER
8. TWO SWING-OUT ALUMINUM TOOL BOARDS LOCATED PER SHOP ORDER
9. ONE ADJUSTABLE SLIDE-OUT TRAY LOCATED PER SHOP ORDER
10. ONE SLIDE-OUT TOOLBOARD LOCATED PER SHOP ORDER
11. LITTLE GIANT MODEL 13 VELOCITY STORAGE LOCATED PER SHOP ORDER
12. 120V NEMA DUPLEX RECEPTACLES LOCATED PER SHOP ORDER
13. WHEEL CHOCKS AND BRACKETS (DTF)

REV	DATE	BY	CH
5	08NOV22	JJB	CHR
4	23SEP22	KLE	CHR

CHASSIS DATA
MAKE: PIERCE
MODEL: VELOCITY

Pierce MANUFACTURING INC.

TITLE: 1500-D-750P, 730G WATER, 20G FOAM, 189" PUC RESCUE LADDERS THRU LS BODY, (3) CROSSLAYS, DELUGE
FOR: CELINA FIRE DEPARTMENT, CELINA, TEXAS
DWG NO.: 37363AD

JOB NO.	37363
SCALE	1:24
DATE	26APR22
DRAWN BY	JJB
CHECKED BY	WKL
DATE	27APR22
SHEET SIZE	D
SHEET NO.	1 OF 1

View File Created 09-NOV-2022 08:03:11