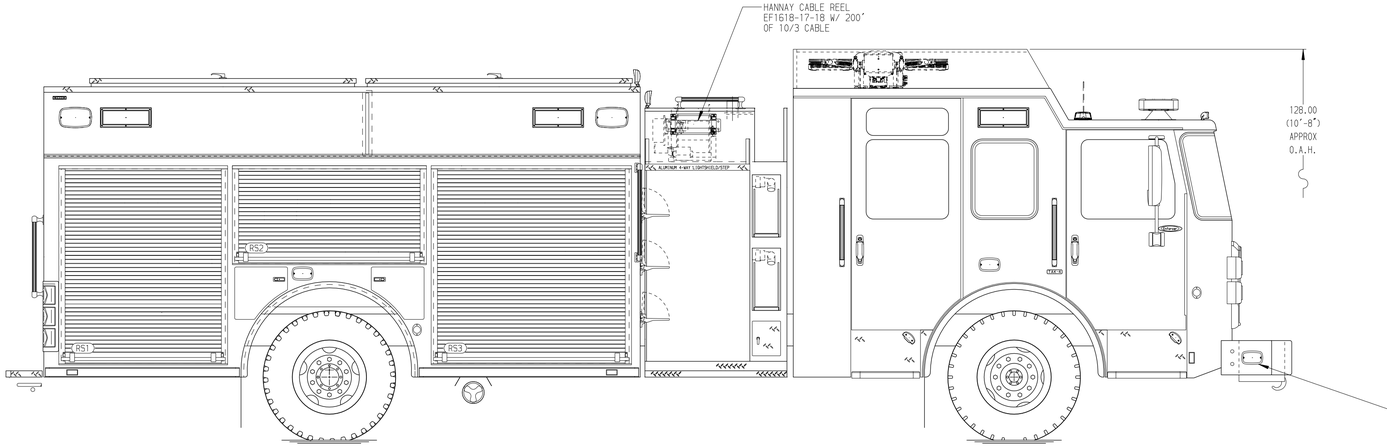

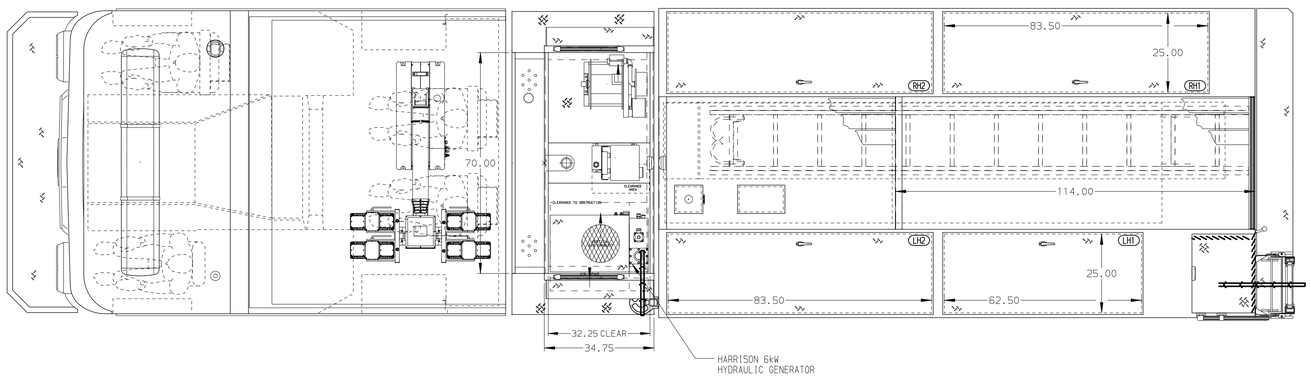

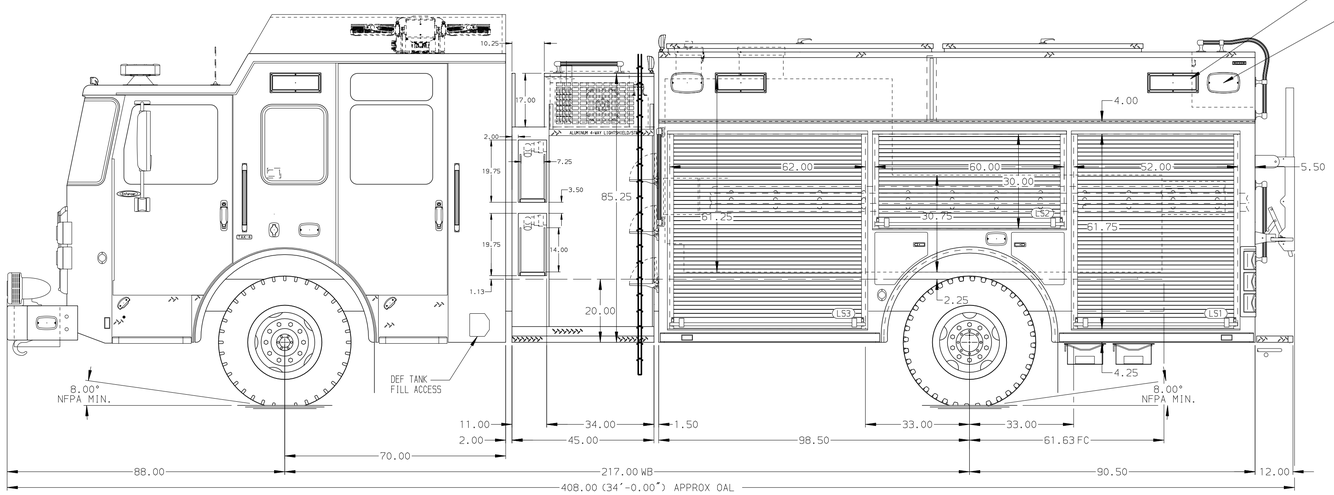

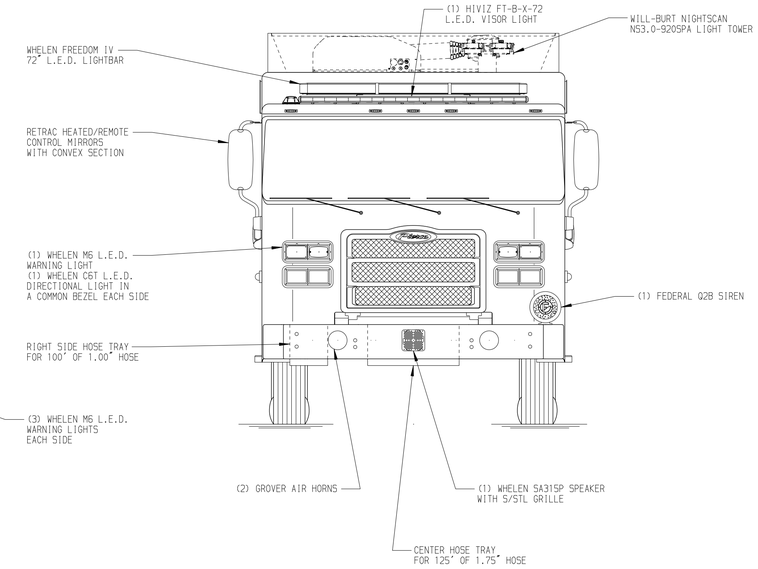

BODY	WATER TANK
Pumper, HDRP, Aluminum	750 Gallon Poly Water Tank
COMPT,LEFT SIDE	Foam System
189" Rollup Full Height & Depth Front & Rear	Husky 3 Single Agent Foam System
COMPT,RIGHT SIDE	Foam Cell
189" Rollup Full Height & Depth Front & Rear	20 Gallon Foam Cell, Not Reduced Water
COMPT,REAR	
29.50" FF Rollup Rear Compt w/Tailboard	

HOSEBED CAPACITY

BED 1
600' OF 2.50" D.J. POLY HOSE

BED 2
1000' OF 5.00" D.J. POLY HOSE

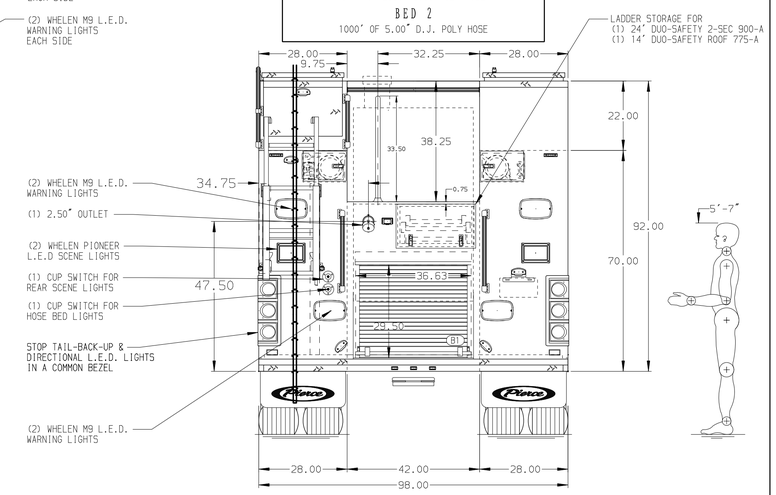

(3) WHELEN PIONEER
L.E.D SCENE LIGHTS
EACH SIDE

(2) WHELEN M9 L.E.D.
WARNING LIGHTS
EACH SIDE

SIDE ROLL AND FRONTAL IMPACT PROTECTION

CUSTOMER APPROVAL

APPROVED BY: _____

DATE: _____

Pierce MANUFACTURING INC.

NOTE

DIMENSIONS SHOWN ARE APPROXIMATE AND ARE SUBJECT TO MINOR DEVIATIONS AS MAY OCCUR OR BE NECESSARY IN CONSTRUCTION.
MINOR DETAILS NOT SHOWN.

1. ONE 1.50 OUTLET WITH 2.00 PIPING AND SWIVEL LOCATED IN CENTER BUMPER TRAY
2. SHORELINE RECEPTACLE WITH KUSSMAUL SUPER AUTO-EJECT LOCATED ON DRIVER SIDE OF THE CAB
3. AIR INLET WITH DISCONNECT COUPLING IN THE DRIVER SIDE STEPWELL
4. BATTERY CHARGER LOCATED BEHIND DRIVER'S SEAT
5. BATTERY CHARGE INDICATOR LOCATED ON THE DRIVER SIDE THOUGH WINDOW DISPLAY
6. THREE 120V DUPLEX RECEPTACLES LOCATED IN CAB
7. AUTOMATIC TIRE CHAINS

REV	DATE	BY	CH
B	17JAN22	COL	THS
A	10NOV21	MMF	THS

CHASSIS DATA
MAKE: PIERCE
MODEL: ENFORCER

TITLE: Pierce Pumper Approval Drawing
FOR: Kootenai County Fire Rescue
DWG NO.: 37381AD-SH1

JOB NO.	37381
SCALE	1:24
DATE	
DRAWN BY	COL 23JUL21
CHECKED BY	COL 15SEP21
SHEET SIZE	D
SHEET NO.	1 OF 2

View File Created 17-JAN-2022 14:41:32