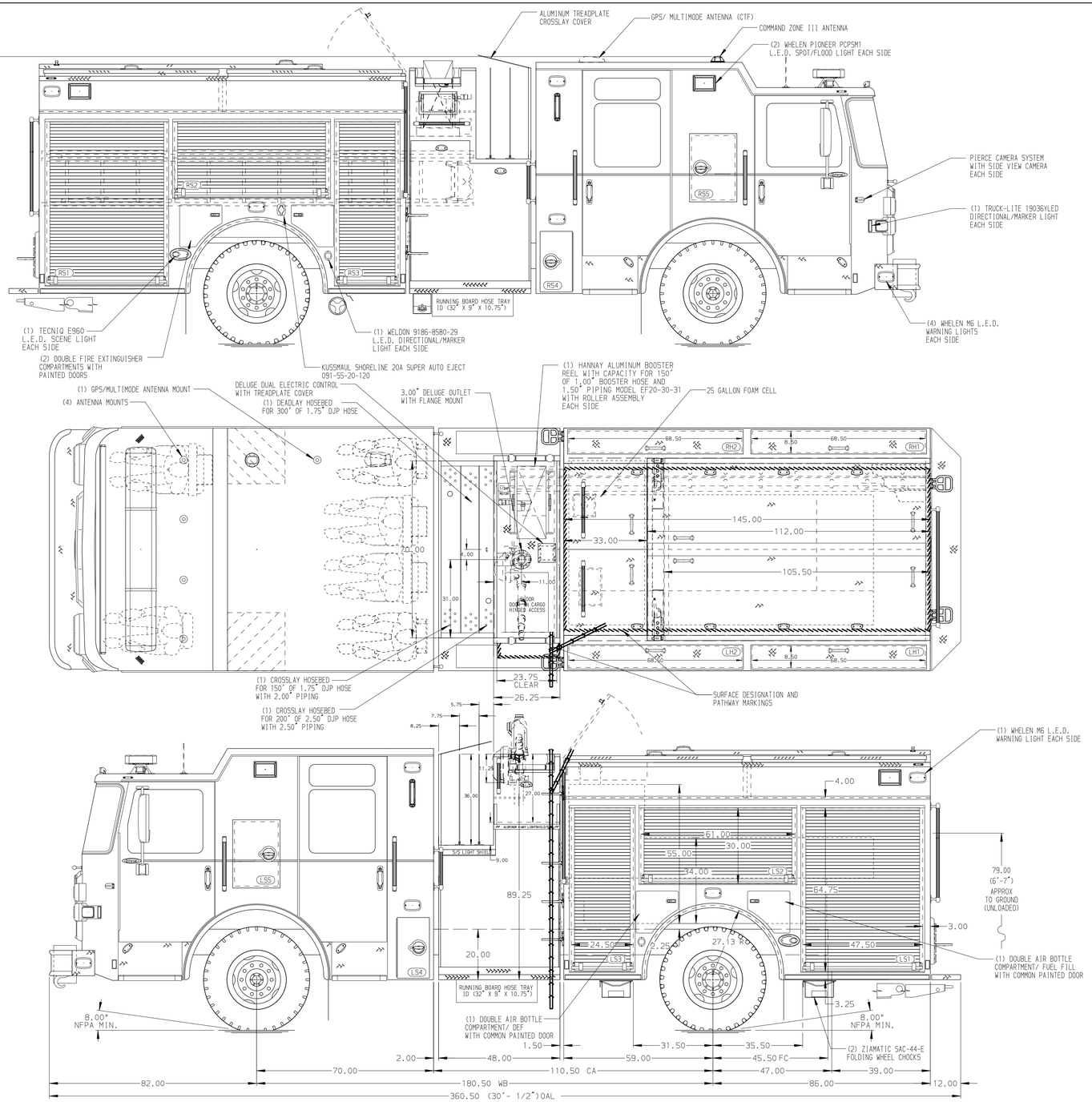

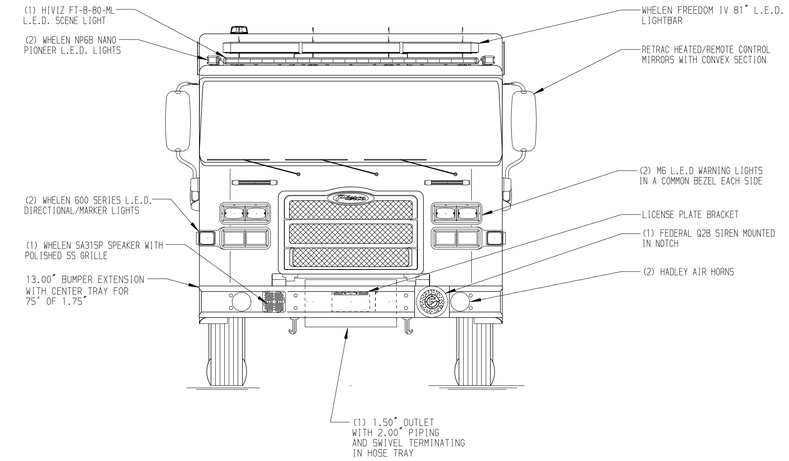

HOSEBED CAPACITIES

1. 1000' OF 5.00" D.J.POLY HOSE
2. 600' OF 2.50" D.J.POLY HOSE
3. 300' OF 1.75" D.J.POLY HOSE
4. 200' OF 3.00" D.J.POLY HOSE
5. 200' OF 3.00" D.J.POLY HOSE

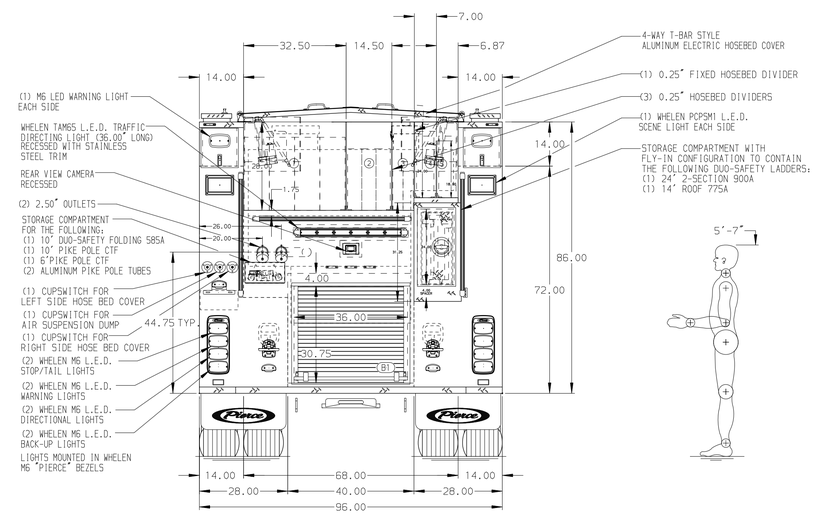

ALUMINUM BODY | MAXIMUM O.A.L. 361.50" | MAXIMUM O.A.H. 118.00" | SIDE ROLL AND FRONTAL IMPACT PROTECTION

NOTE

DIMENSIONS SHOWN ARE APPROXIMATE AND ARE SUBJECT TO MINOR DEVIATIONS AS MAY OCCUR OR BE NECESSARY IN CONSTRUCTION.
MINOR DETAILS NOT SHOWN.

1. AIR OUTLET WITH SHUTOFF VAVLE LOCATED AT DRIVER'S SIDE PUMP PANEL
2. BATTERY CHARGER LOCATED IN BODY COMPARTMENT PER ORDER
3. BATTERY CHARGE INDICATOR LOCATED ON DRIVER'S SEAT RISER
4. DUAL LED LIGHT STRIPS LOCATED IN HOSE BED
5. DUAL LED LIGHT STRIPS IN HATCH COMPARTMENTS LOCATED PER ORDER
6. FOAM PRO 2002 FOAM SYSTEM

REV	DATE	BY	CH
7	07SEP22	SAM	BSE
6	12JUL22	SAM	BSE
5	20MAY22	SAM	BSE

CHASSIS DATA
MAKE: PIERCE
MODEL: ENFORCER

Pierce MANUFACTURING INC.

TITLE: 1500-D-725P,700G WATER W/25G FOAM,145"-EXT 140" BODY (1) CROSSLAY, (2) DEADLAYS, DELUGE

FOR: SACRAMENTO METROPOLITAN FIRE DISTRICT MATHER, CALIFORNIA

DWG NO.: 37403AD-SH1

JOB NO.	37403 (01-03)
SCALE	1:24
DATE	
DRAWN BY	SAM 04MAY22
CHECKED BY	BSE 04MAY22
SHEET SIZE	D
SHEET NO.	1 OF 2

View File Created 07-SEP-2022 14:47:27