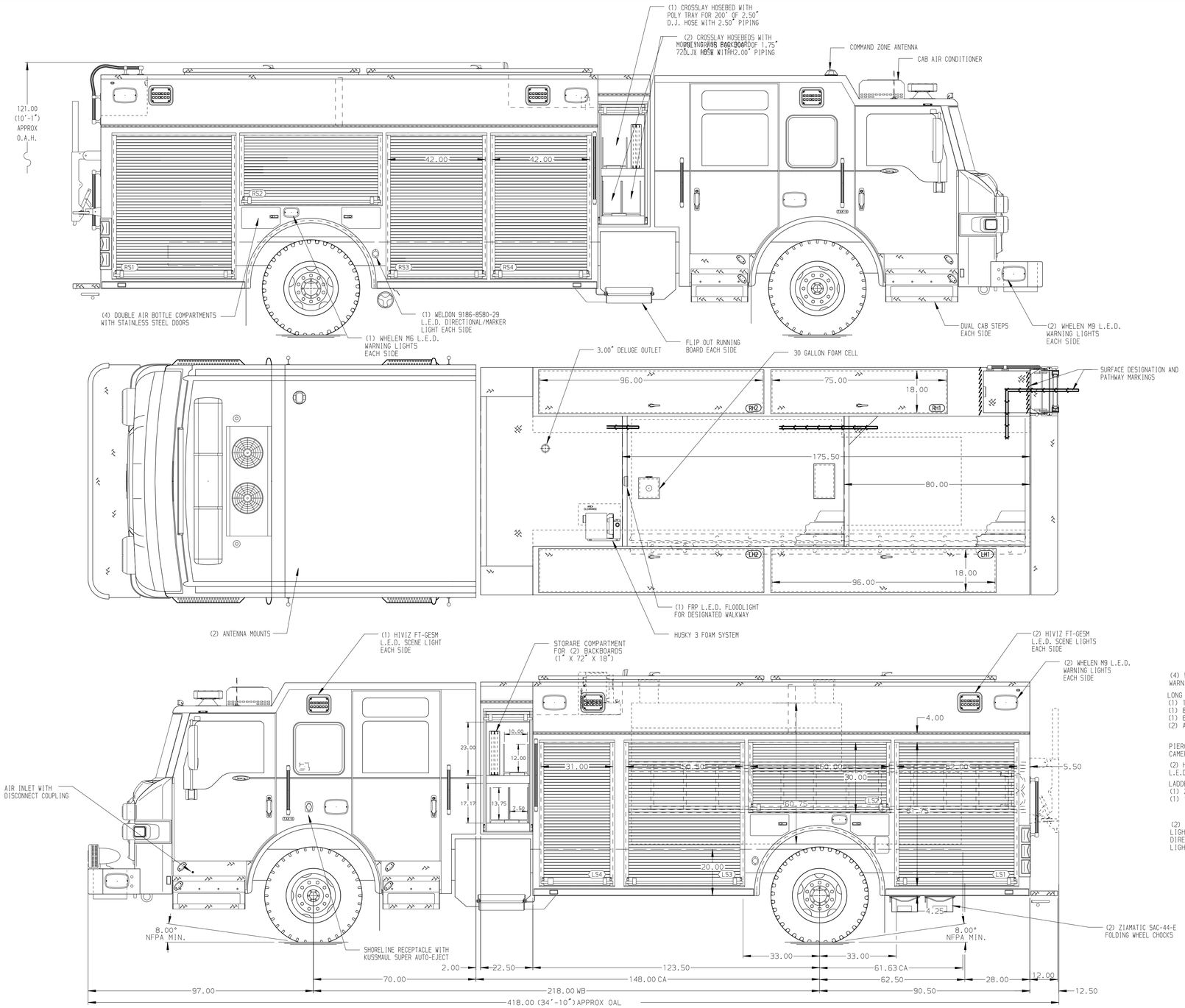

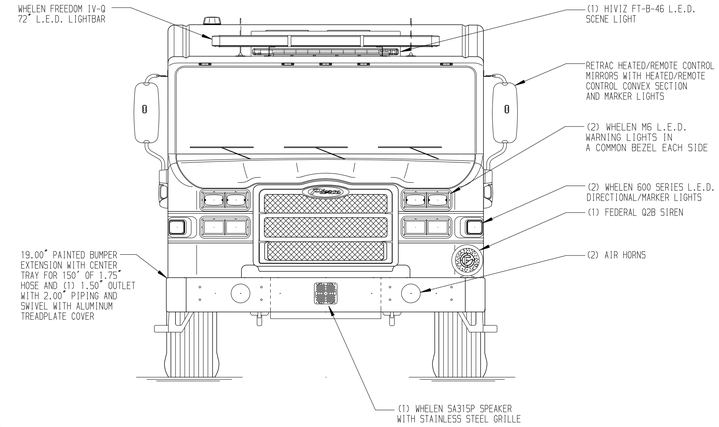

HOSEBED CAPACITIES

1. 1000' OF 5.00" D.J. HOSE
2. 600' OF 2.50" D.J. HOSE

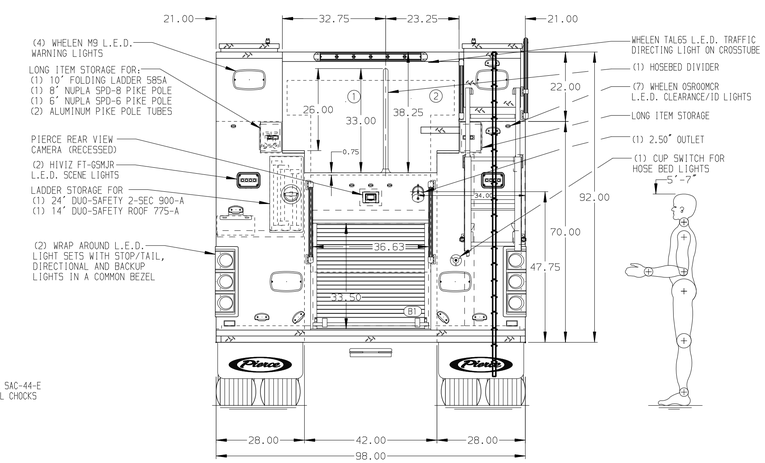

ALUMINUM BODY

SIDE ROLL AND FRONTAL IMPACT PROTECTION

NOTE

DIMENSIONS SHOWN ARE APPROXIMATE AND ARE SUBJECT TO MINOR DEVIATIONS AS MAY OCCUR OR BE NECESSARY IN CONSTRUCTION.
MINOR DETAILS NOT SHOWN.

1. BATTERY CHARGER LOCATED BEHIND DRIVER SEAT
2. BATTERY CHARGER INDICATOR BEHIND DRIVER'S SEAT DISPLAYED THROUGH WINDOW
3. DUAL L.E.D. LIGHT STRIPS LOCATED IN HOSE BED
4. FIVE FULL WIDTH/DEPTH ADJUSTABLE SHELVES LOCATED PER ORDER
5. FOUR FLOOR MOUNTED SLIDE-OUT TRAYS WITH 2.00" SIDES LOCATED PER ORDER
6. TWO SWING-OUT ALUMINUM TOOL BOARDS LOCATED PER ORDER

REV	DATE	BY	CH
1	16DEC22	COL	THS
2	17OCT22	LME	THS

CHASSIS DATA
MAKE: PIERCE
MODEL: VELOCITY FR

Pierce MANUFACTURING INC.

TITLE: 2000-D-1030P,1000G WATER W/30G FOAM,214" PUC RESCUE (3) CROSSLAYS, HUSKY 3, LADDERS THRU BODY
FOR: PIERCE FIELD UNIT APPLETON, WISCONSIN
DWG NO.: 37407AD

JOB NO.	37407
SCALE	1:24
DATE	
DRAWN BY	LME 10MAY22
CHECKED BY	CZA 10MAY22
SHEET SIZE	D
SHEET NO.	1 OF 1

View File Created 10-JAN-2023 12:43:21