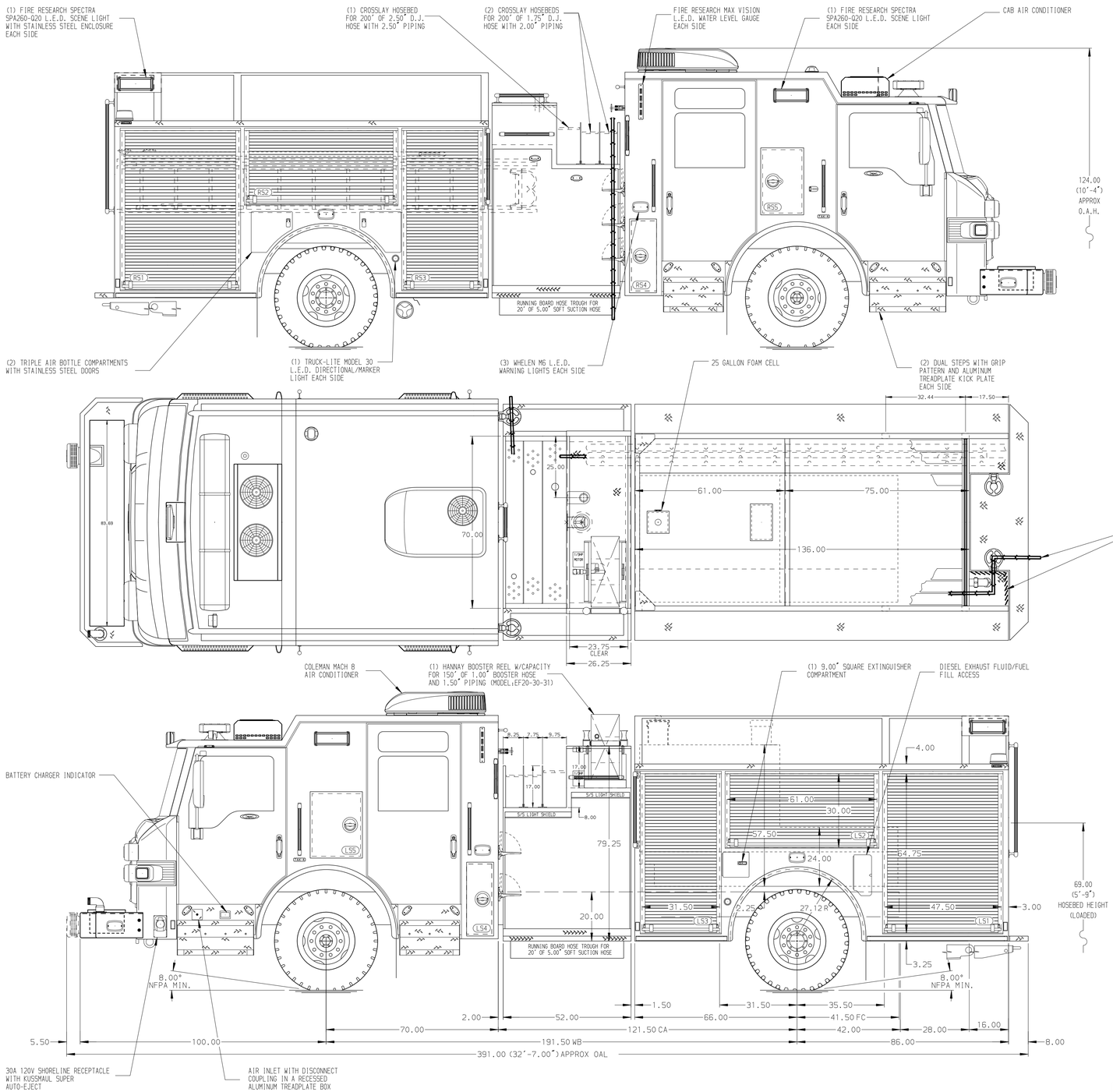

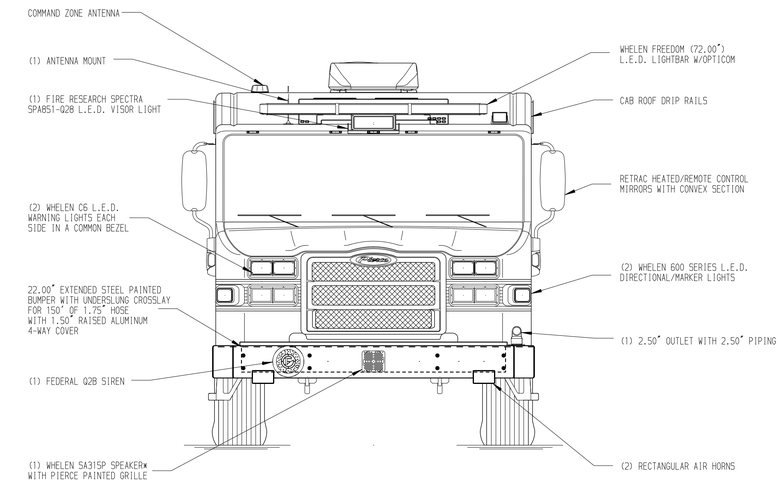

HOSEBED CAPACITIES

① - 1000' OF 5.00" D.J. POLY HOSE

② - 600' OF 2.50" D.J. POLY HOSE

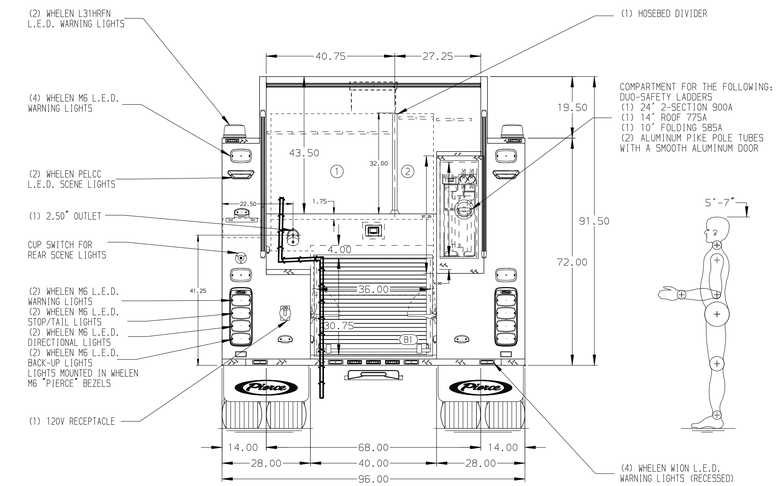

ALUMINUM BODY

SIDE ROLL AND FRONTAL IMPACT PROTECTION

NOTE

DIMENSIONS SHOWN ARE APPROXIMATE AND ARE SUBJECT TO MINOR DEVIATIONS AS MAY OCCUR OR BE NECESSARY IN CONSTRUCTION.
MINOR DETAILS NOT SHOWN.

1. KUSSMAUL AIR COMPRESSOR LOCATED BEHIND DRIVER'S SEAT
2. DRIP PAN GUARD FOR ROLL-UP DOOR LOCATED PER SHOP ORDER
3. SEVEN FULL WIDTH/DEPTH ADJUSTABLE SHELVES PER SHOP ORDER
4. ONE FLOOR MOUNTED SLIDE-OUT TRAY LOCATED PER SHOP ORDER
5. CTECH DRAWER ASSEMBLY LOCATED PER SHOP ORDER
6. ONE SWING-OUT ALUMINUM TOOL BOARD LOCATED PER SHOP ORDER
7. 1.00" RETAINING LIP LOCATED PER SHOP ORDER
8. TWO HORIZONTAL EQUIPMENT MOUNTING TRACKS LOCATED PER SHOP ORDER
9. FOAM PRO 1600 SINGLE AGENT FOAM SYSTEM LOCATED PER SHOP ORDER
10. XANTREX INVERTER LOCATED PER SHOP ORDER
11. TWO SUB FEED BREAKER BOXES LOCATED PER SHOP ORDER

REV	DATE	BY	CH
▽	-	-	-

CHASSIS DATA
MAKE: PIERCE
MODEL: IMPEL FR

CUSTOMER APPROVAL

APPROVED BY: _____

DATE: _____

Pierce MANUFACTURING INC.

TITLE: 1500-D-750P, 725G WATER, 25G FOAM, 152" FDLER PUMPER LADDERS BTWN TANK & SS, (3) CROSSLAYS, DELUGE

FOR: EULESS FIRE DEPARTMENT, EULESS, TEXAS

DWG NO.: 37439AD

JOB NO.	37439
SCALE	1:24
DATE	
DRAWN BY	JJB
	17JUN22
CHECKED BY	CDU
	17JUN22
SHEET SIZE	D
SHEET NO.	1 OF 1

View File Created 17-JUN-2022 12:34:56