RIGHT SIDE COMPARTMENTS CONTAIN THE FOLLOWING:

COMPARTMENT RS1 CONTAINS:
- (1) SWING OUT TOOLBOARD
- (1) STD DEPTH ADJ SHELF
- (1) RACK FOR 10 SCBA BOTTLES
- (1) CASCADE SYSTEM CONTROL PANEL
- (1) "SPACESAVER"2-BOTTLE FILL ENCLOSURE
-

COMPARTMENT RS2 CONTAINS:
- (1) STORAGE RACK
- (1) RACK FOR 4 UN AIR STORAGE BOTTLES WITH 4-WAY COVER
- (1) 2-WAY FLOOR MOUNTED SLIDE OUT TRAY
-

COMPARTMENT RS3 CONTAINS:
- (1) VERTICAL REAR WALL DIVIDER
- (3) STD DEPTH ADJ SHELVES
-
-
-

COMPARTMENT RS4 CONTAINS:
- (1) 1/2 DEPTH ADJ SHELF
- (1) VERTICAL REAR WALL DIVIDER
- (1) RACK FOR 11 AIR BAGS
- (1) FLOOR MOUNTED TRAY
- (1) POLY TOOL BOX
- (1) HORIZONTAL FLOOR EXTENSION
-
-
-

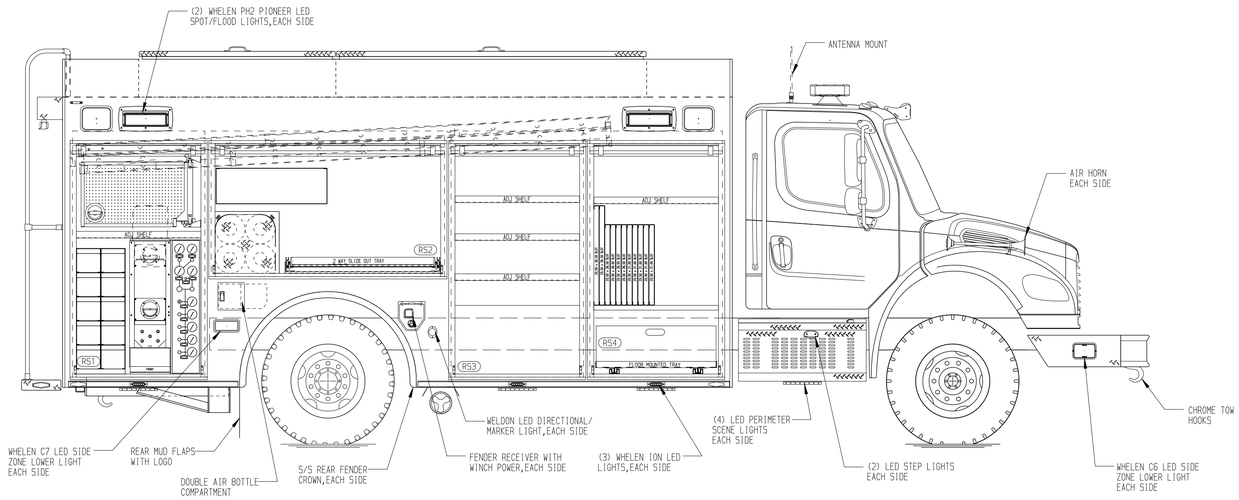

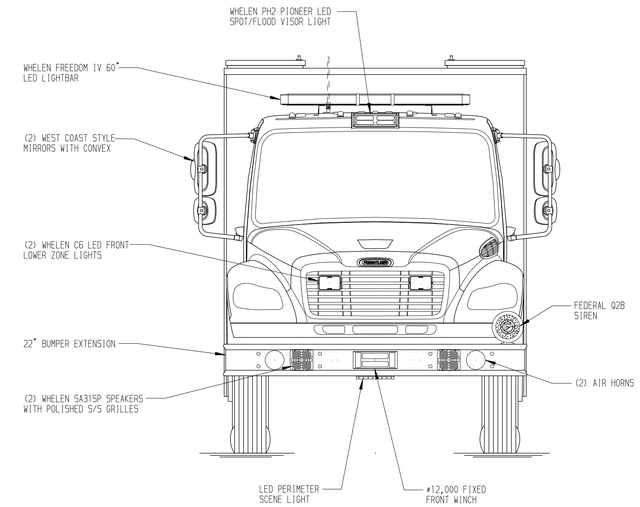

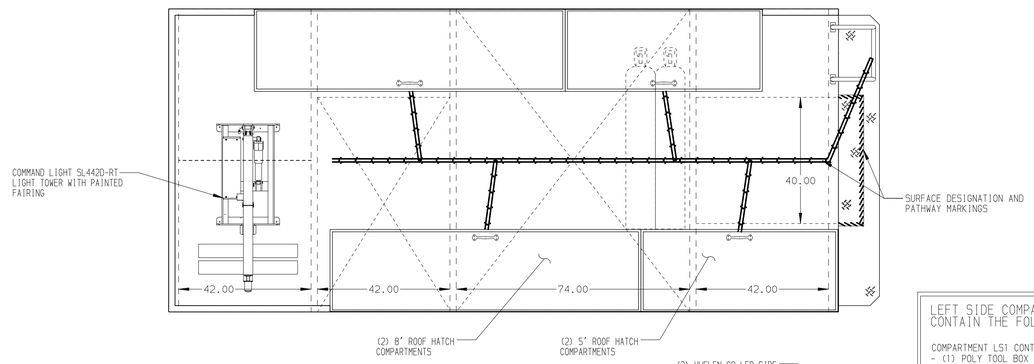

REAR COMPARTMENT CONTAINS THE FOLLOWING:

COMPARTMENT B1 CONTAINS:
- (1) 40"DP ADJ SHELF
- (1) 38"DP FLOOR MOUNTED SLIDE OUT TRAY
- (2) 38"DP ADJ SLIDE OUT TRAYS
- (1) RACK FOR THE FOLLOWING:
  - (1) 24' 2-SECTION LADDER
  - (1) 14' ROOF LADDER
  - (1) 10' FOLDING LADDER
  - (2) PIKE POLES

LEFT SIDE COMPARTMENTS CONTAIN THE FOLLOWING:

COMPARTMENT LS1 CONTAINS:
- (1) POLY TOOL BOX
- (1) STD DEPTH ADJ SHELF
- (1) 22"DP ADJ SLIDE OUT TRAY
- (1) FLOOR MOUNTED TRAY
-

COMPARTMENT LS2 CONTAINS:
- (1) STORAGE RACK
- (1) RACK FOR 4 UN AIR STORAGE BOTTLES WITH 4-WAY COVER
- (1) 2-WAY FLOOR MOUNTED SLIDE OUT TRAY
-
-

COMPARTMENT LS3 CONTAINS:
- (1) FLOOR MOUNTED TRAY
- (2) 62" DP ADJ SLIDE OUT TRAYS
- (1) VERTICAL REAR WALL DIVIDER
- (1) FLOOR MOUNTED TRAY
-
-

COMPARTMENT LS4 CONTAINS:
- (1) KUSSMAUL PUMP PLUS 1200 CHARGER
- (1) 1/2 DEPTH ADJ SHELF
- (1) VERTICAL REAR WALL DIVIDER
- (2) STREAMLIGHT FIRE VULCAN HANDLIGHTS
- (1) CIRCUIT BREAKER PANEL
- (1) GENERATOR METER PANEL
- (1) COMMAND LIGHT CONTROLLER
- (1) 42"DP ADJ SLIDE OUT TRAY
- (1) FLOOR MOUNTED TRAY

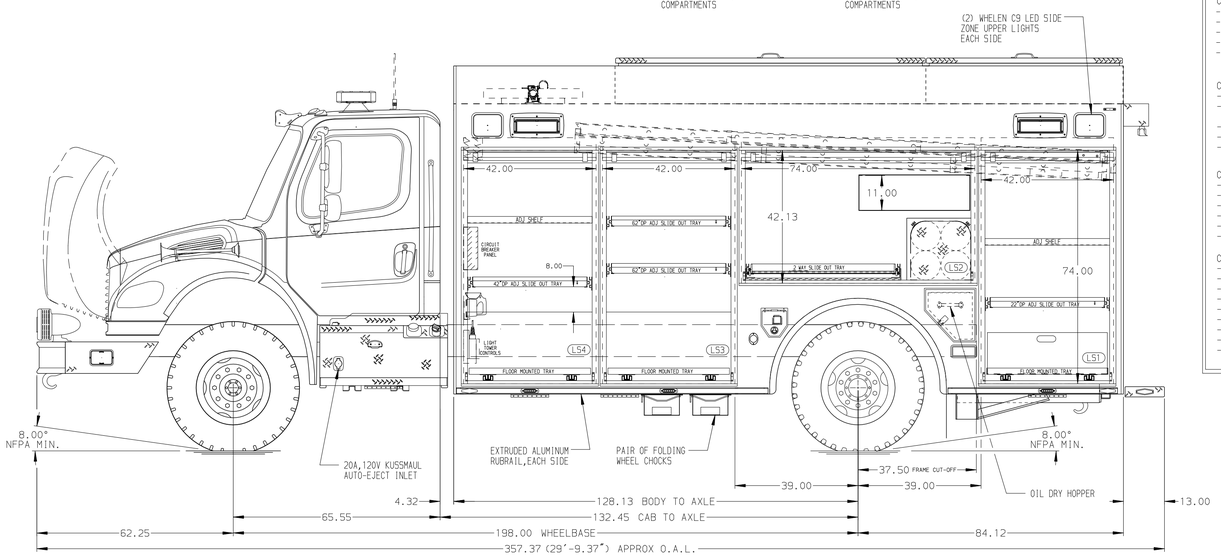

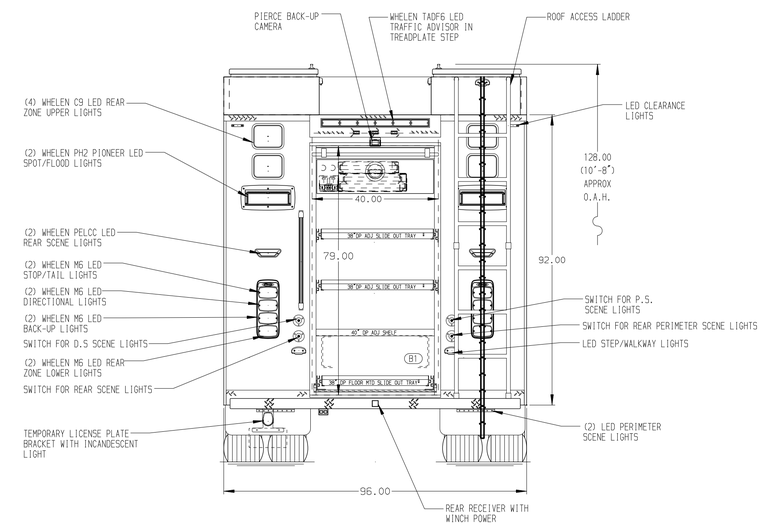

NOTE

DIMENSIONS SHOWN ARE APPROXIMATE AND ARE SUBJECT TO MINOR DEVIATIONS AS MAY OCCUR OR BE NECESSARY IN CONSTRUCTION.
MINOR DETAILS NOT SHOWN.

NOTES:
1. ONAN 15KW PTO DRIVEN GENERATOR WITH SPLASH GUARD LOCATED BETWEEN FRAME RAILS
2. WARN #9,000 PORTABLE RECEIVER STYLE WINCH
3. BATTERY CHARGE INDICATOR LOCATED ON DRIVER'S SEAT RISER
4. PULL STRAPS ON ALL BODY ROLL-UP DOORS
5. AMDOR DUAL LED LIGHT STRIPS IN ALL BODY COMPARTMENTS

CLEAR DOOR WIDTH KEY

AMDOR ROLL UP DOORS:	-2 1/4"
GORTITE ROLL UP DOORS:	-2 1/2"
PIERCE DOUBLE LAP DOORS:	-4 1/4"
PIERCE LIFT-UP LAP DOORS:	-1 1/2"

(EX: 60"F-F - 2 1/4"= 57 3/4" CLEAR)
(F-F)= FRAME TO FRAME

REV	DATE	BY	CH
▽	-	-	-

CHASSIS DATA
MAKE: FREIGHTLINER
MODEL: M2-106

CUSTOMER APPROVAL

APPROVED BY: _____

DATE: _____

Pierce MANUFACTURING INC.

JOB NO.	37453		
SCALE	1:24	DATE	
TITLE	ENCORE RESCUE VEHICLE 42.42.74.42	DRAWN BY	DHE 16MAY22
FOR	HANNAH-SALEM FRIENDFIELD FIRE DEPARTMENT BID #639 COKER, TREY	CHECKED BY	CDK 17MAY22
DWG NO.	37453AD	SHEET SIZE	D
		SHEET NO.	1 OF 1

View File Created 17-MAY-2022 09:26:09