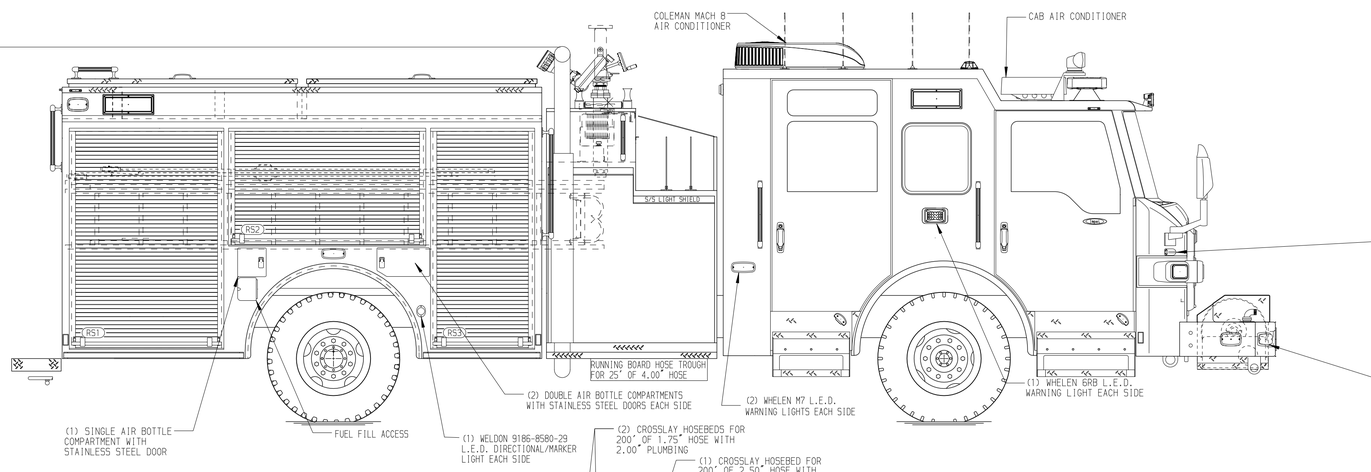

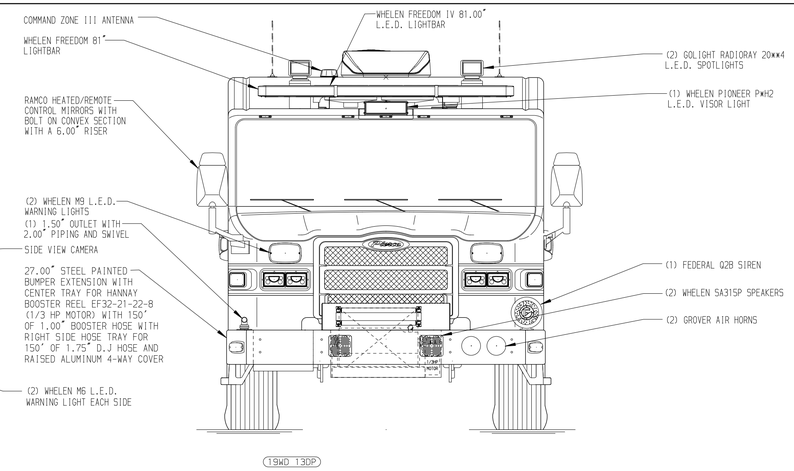

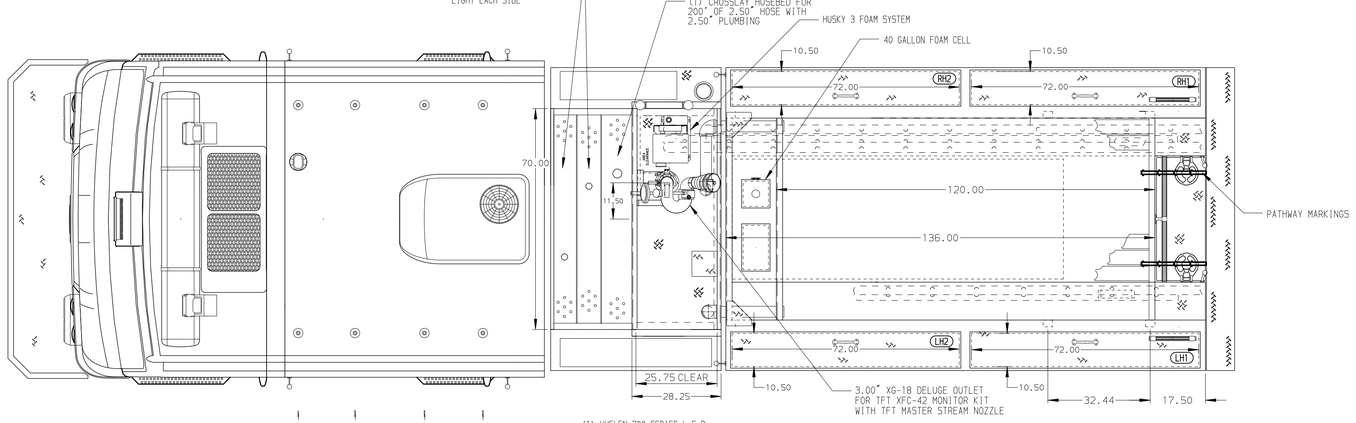

HOSEBED CAPACITIES

1. 200' OF 2.50" D.J. POLYESTER HOSE
2. 1000' OF 4.00" D.J. POLYESTER HOSE
3. 200' OF 2.50" D.J. POLYESTER HOSE

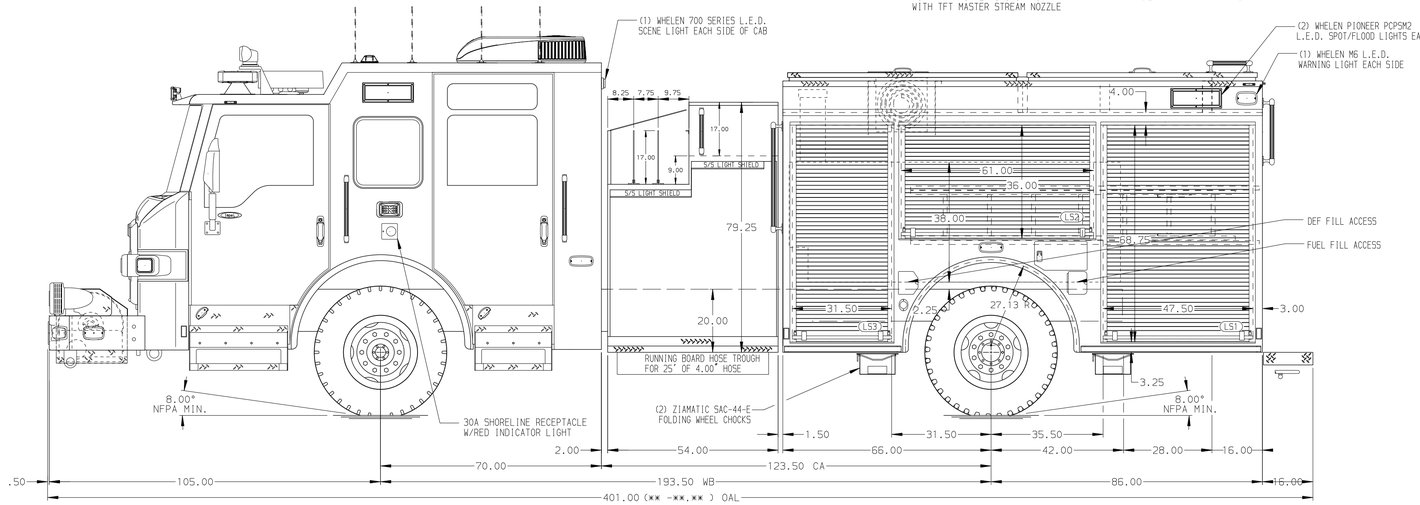

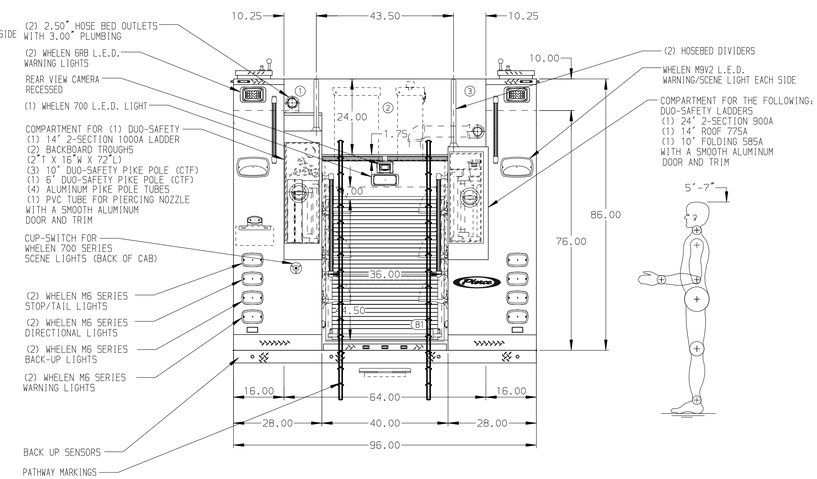

ALUMINUM BODY

SIDE ROLL AND FRONTAL IMPACT PROTECTION

NOTE

DIMENSIONS SHOWN ARE APPROXIMATE AND ARE SUBJECT TO MINOR DEVIATIONS AS MAY OCCUR OR BE NECESSARY IN CONSTRUCTION.
MINOR DETAILS NOT SHOWN.

1. AIR INLET/OUTLET WITH DISCONNECT FITTING LOCATED ON DRIVER'S SIDE PUMP PANEL

REV	DATE	BY	CH
▽	-	-	-

CHASSIS DATA	TITLE	1500-D-540P, 500 WATER/40 FOAM, 152" BODY (3)CROSSLAYS, DELUGE, BOOSTER REEL, HUSKY 3	
MAKE PIERCE	FOR	PHOENIX FIRE DEPARTMENT PHOENIX, ARIZONA	
MODEL IMPEL FR	DWG NO.	37499AD-SH1	

Pierce MANUFACTURING INC.

JOB NO.	37499 01-08
SCALE 1:24	DATE
DRAWN BY KES	31MAR22
CHECKED BY BSE	18ARP22
SHEET SIZE D	SHEET NO. 1 OF 1

View File Created 18-APR-2022 10:34:53