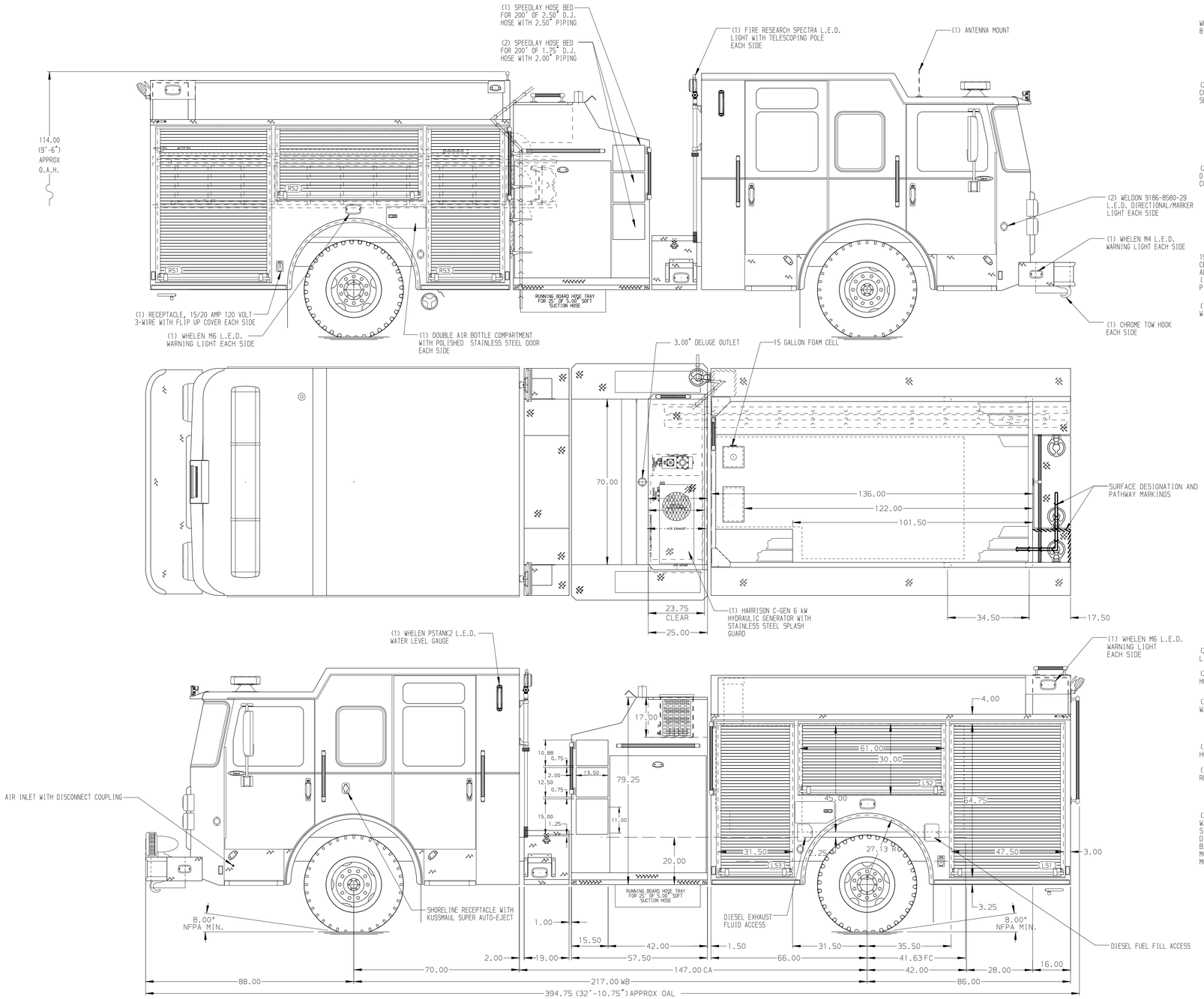

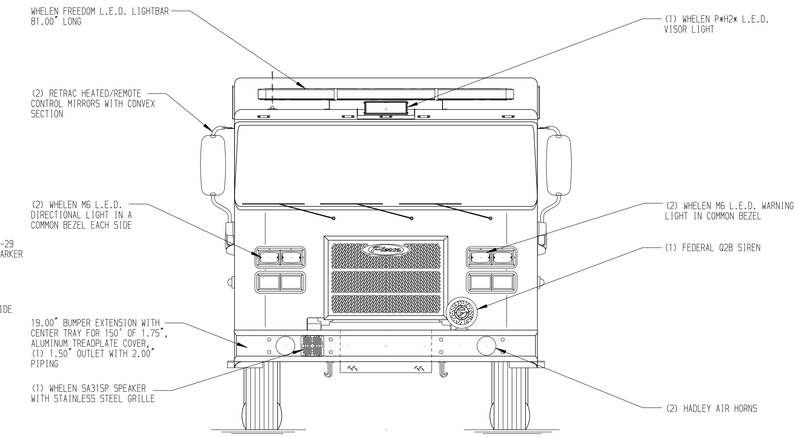

HOSEBED CAPACITIES

1. 300' OF 3.00" D.J. POLY HOSE
2. 1000' OF 5.00" L.D. HOSE
3. 300' OF 3.00" D.J. POLY HOSE

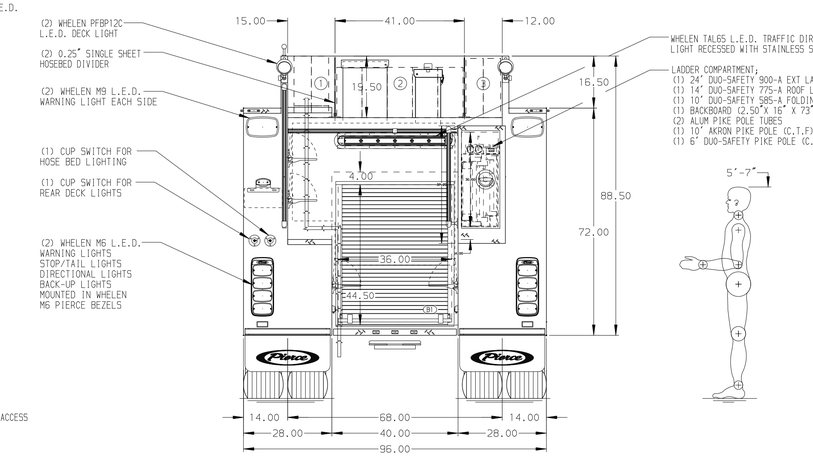

ALUMINUM BODY

NOTE

DIMENSIONS SHOWN ARE APPROXIMATE AND ARE SUBJECT TO MINOR DEVIATIONS AS MAY OCCUR OR BE NECESSARY IN CONSTRUCTION.
MINOR DETAILS NOT SHOWN.

CUSTOMER APPROVAL

APPROVED BY: _____

DATE: _____

REV	DATE	BY	CH
▽	-	-	-

CHASSIS DATA — MAKE: PIERCE — MODEL: SABER FR

Pierce MANUFACTURING INC.

TITLE: 1250-D-765P, 750G WATER, 15G FOAM, 152" FDLER BODY (3) SPEEDLAYS, RS LADDER STORAGE BETWEEN TANK & S.S

FOR: PLANT CITY FIRE RESCUE, PLANT CITY, FLORIDA

DWG NO.: 37530AD

JOB NO.	37530
SCALE	1:24
DATE	
DRAWN BY	JRC
28FEB22	
CHECKED BY	EGO
07MAR22	
SHEET SIZE	D
SHEET NO.	1 OF 1

View File Created 07-MAR-2022 07:23:24