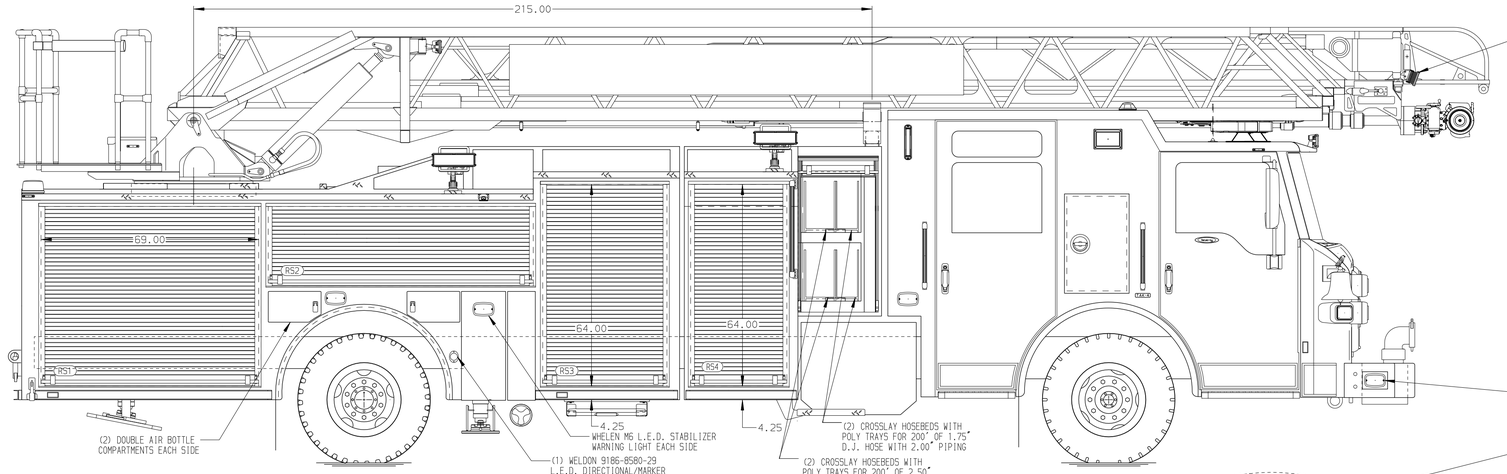


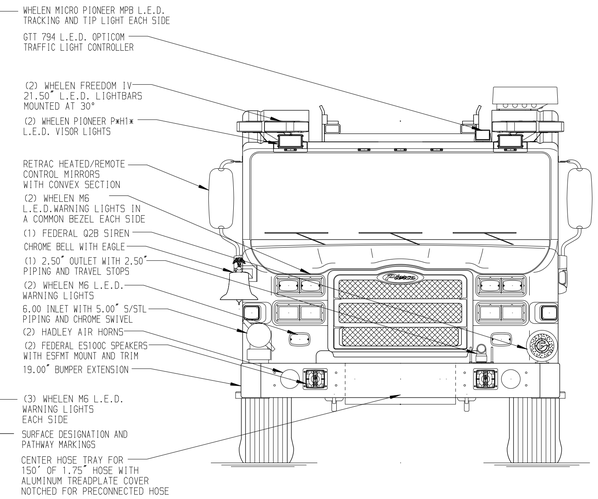


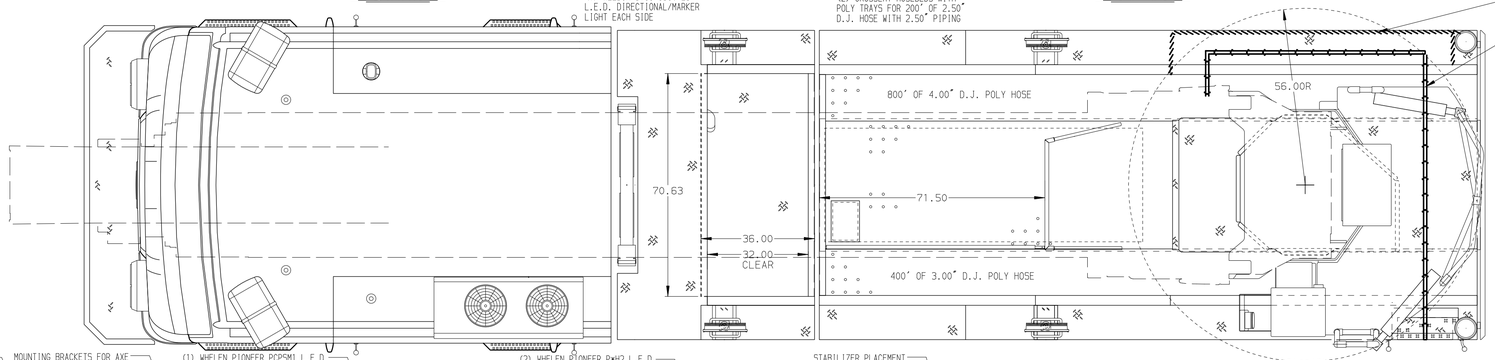


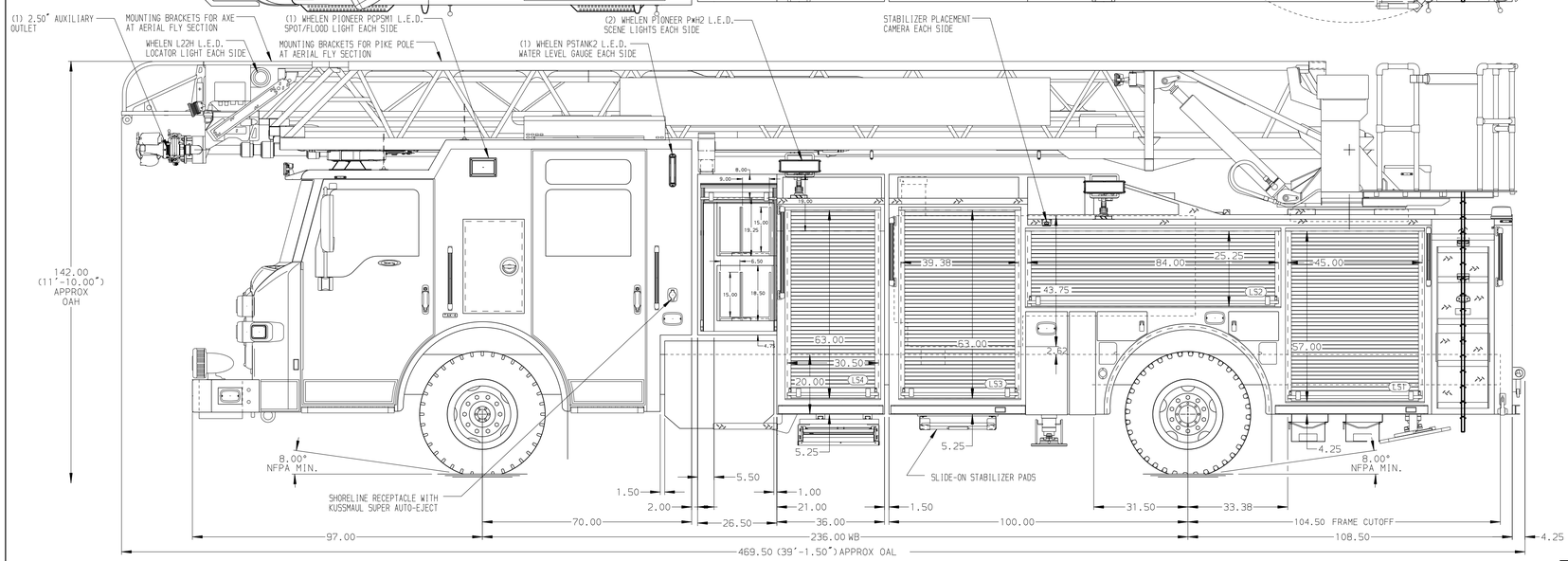


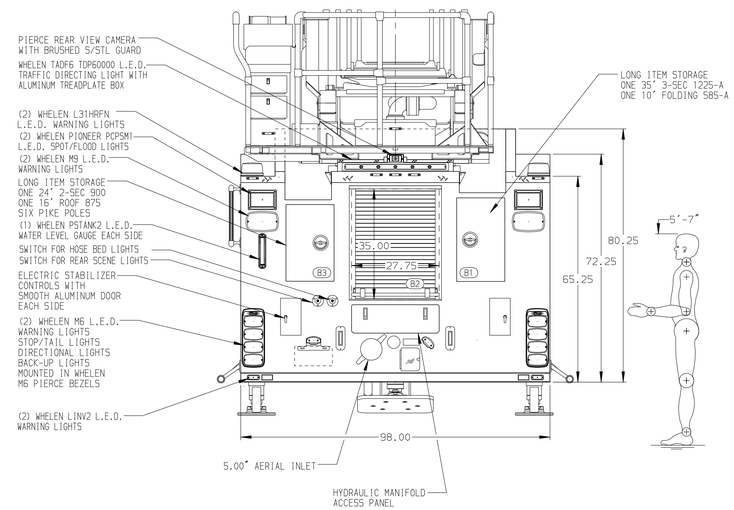


ALUMINUM BODY

SIDE ROLL AND FRONTAL IMPACT PROTECTION

NOTE

DIMENSIONS SHOWN ARE APPROXIMATE AND ARE SUBJECT TO MINOR DEVIATIONS AS MAY OCCUR OR BE NECESSARY IN CONSTRUCTION.
MINOR DETAILS NOT SHOWN.

1. ONSPOT AUTOMATIC TIRE CHAINS TO BE PROVIDED AT REAR
2. BATTERY CHARGE INDICATOR LOCATED NEAR DRIVER'S SEAT RISER WITH BRACKET
3. L.E.D. LIGHT STRIPS LOCATED IN THE HOSE BED PER SHOP ORDER
4. FIFTEEN ADJUSTABLE FULL WIDTH/FULL DEPTH SHELVES IN COMPARTMENT PER ORDER
5. FOUR FLOOR MOUNTED SLIDE-OUT TRAYS IN COMPARTMENT PER ORDER
6. ONE 3-DRAWER CTECH CABINET IN COMPARTMENT PER ORDER
7. TWO SWING-OUT ALUMINUM TOOL BOARDS IN COMPARTMENT PER ORDER
8. ALUMINUM PEGBOARD ON BACK WALL OF COMPARTMENT PER ORDER
9. NORCOLD NR751BB REFRIGERATOR WITH ADJACENT A/C AND D/C OUTLET LOCATED PER ORDER
10. TRIDENT FOLDING STEPS ON AERIAL DEVICE
11. L.E.D. LIGHTING ON AERIAL LADDER SECTIONS
12. FIRE RESEARCH 3-WAY INTERCOM SYSTEM BETWEEN AERIAL TIP,PUMP PANEL AND TURNTABLE
13. WIRELESS CAMERA LOCATED AT AERIAL EGRESS
14. LIFTING EYE ROPE RESCUE ATTACHMENT AT AERIAL TIP
15. LYFEPULLEY RESCUE SYSTEM AT AERIAL TIP
16. PAINTED STORAGE BOX FOR LYFE PULLEY ROPE TIE BAR AT AERIAL BASE SECTION
17. 1500 GPM HIGH FLOW WATERWAY
18. REMOTE MONITOR CONTROLS AT PUMP PANEL
19. AERIAL WIRELESS REMOTE CONTROL
20. AERIAL LIMITED RETRACTION NOT REQUIRED
21. FOUR 120V 6-PLACE RECEPTACLE STRIPS IN CAB PER ORDER
22. TWO 120V RECEPTACLES IN COMPARTMENT PER ORDER
23. AIR INLET WITH DISCONNECT COUPLING LOCATED IN DRIVERS STEP WELL OF CAB SPECIAL LOCATION

**CUSTOMER APPROVAL**

APPROVED BY: _____

DATE: _____

| REV | DATE | BY | CH |
|---|---|---|---|
| ▽ | - | - | - |

| | |
|---|---|
| CHASSIS DATA | |
| MAKE | PIERCE |
| MODEL | VELOCITY |

**Pierce MANUFACTURING INC.**

| | |
|---|---|
| TITLE | 107' ASCENDANT AERIAL LADDER AND BODY ASSEMBLY<br>500 GALLON WATER TANK |
| FOR | LENEXA FIRE DEPARTMENT<br>LENEXA, KS |
| DWG NO. | 37561AD |

| | |
|---|---|
| JOB NO. | 37561 01-02 |
| SCALE | 1:24 |
| DATE | |
| DRAWN BY | JGA 15JUL22 |
| CHECKED BY | ZCH 18JUL22 |
| SHEET SIZE | D |
| SHEET NO. | 1 OF 1 |

View File Created 19-JUL-2022 06:59:59