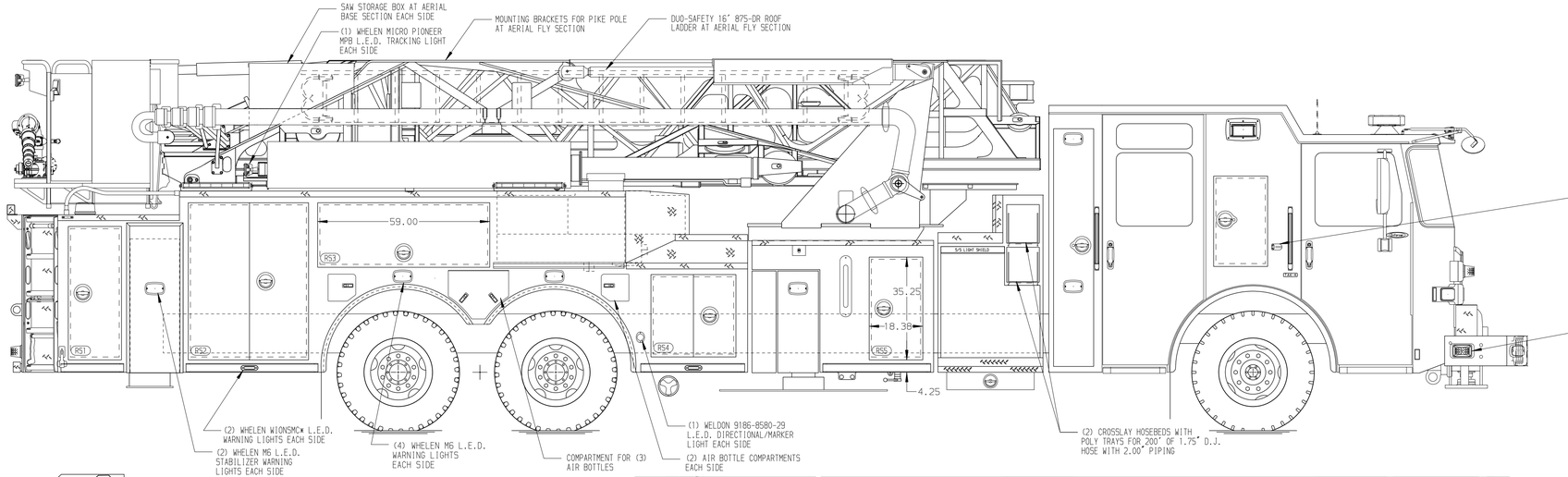

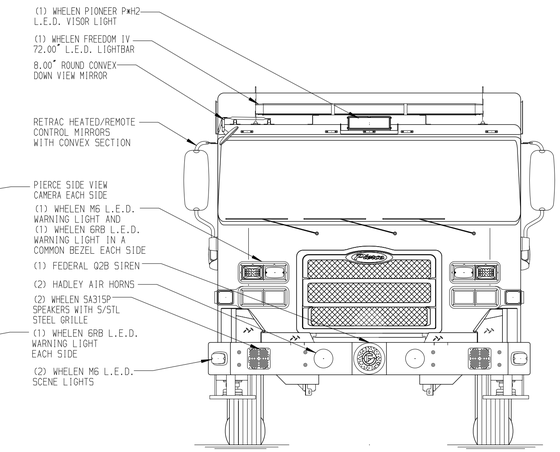

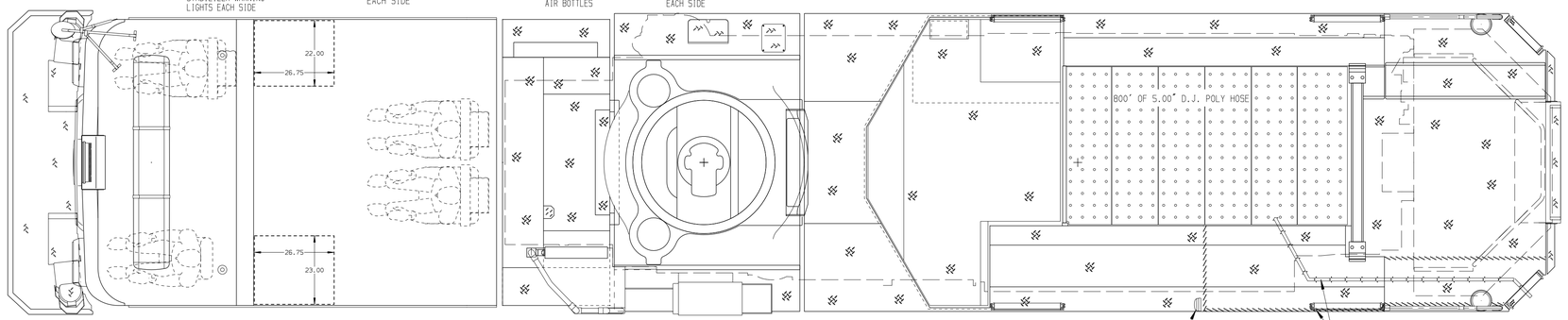

BODY	WATER TANK
100' Ascendant Aerial Tower Alum Body	300 Gallon Poly Water Tank
COMPT,LEFT SIDE	Foam System
Full Height Lap Doors	Foam System Not Required
COMPT,RIGHT SIDE	Foam Cell
Full Height Lap Doors	Foam Cell Not Required

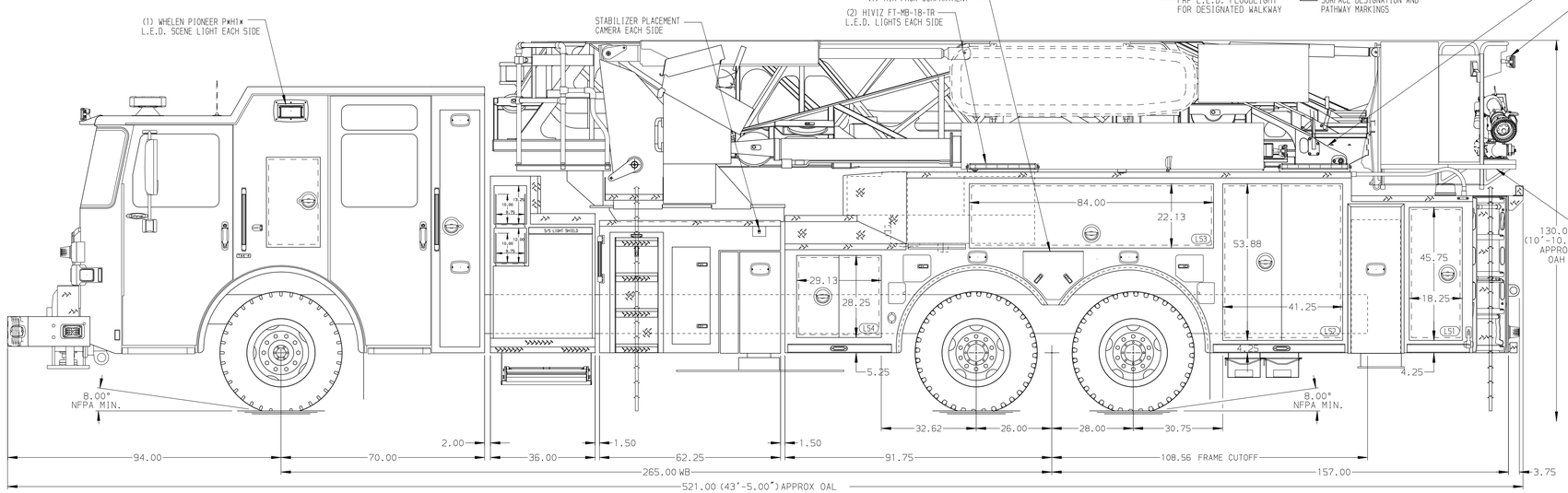

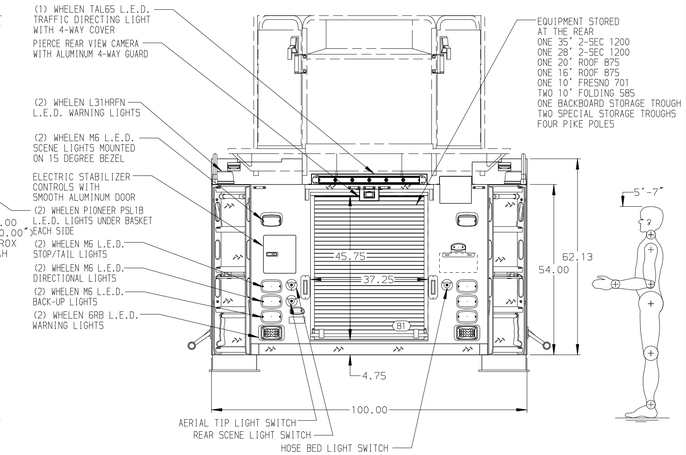

CHASSIS	CAB	AXLE,FRONT,CUSTOM	TRANSMISSION	PUMPHOUSE	CROSSLAYS,1.50"	SPEEDLAYS	-
Enforcer Chassis	7010 Enforcer Cab	24,000 Lb TAK-4 Axle	Allison 6th Gen, 4000 EVS P	36" Control Zone Side Mount	(2) 1.50",With Trays,200'	Speedlays Not Required	-
ENGINE	BUMPER	AXLE,REAR		PUMP	CROSSLAYS,2.50"	GENERATOR	-
500 HP Cummins X12 Engine	24" Painted Aluminum With Notch	54,000 Lb Meritor Axle		2000 GPM Waterous S100	2.50" Crosslay Not Required	Generator Not Required	

NOTE

DIMENSIONS SHOWN ARE APPROXIMATE AND ARE SUBJECT TO MINOR DEVIATIONS AS MAY OCCUR OR BE NECESSARY IN CONSTRUCTION.
MINOR DETAILS NOT SHOWN.

1. BATTERY CHARGER LOCATED BEHIND THE DRIVER'S SEAT
2. BATTERY CHARGER INDICATOR LOCATED ON DRIVER'S SEAT RISER
3. L.E.D. LIGHT STRIPS WITH STAINLESS STEEL PROTECTIVE COVER LOCATED IN HOSE BED
4. TECNIQ L.E.D. RUNG STYLE LIGHTING ON AERIAL LADDER SECTIONS PER ORDER
5. DC POWER TO AERIAL BASKET
6. 2-WAY INTERCOM SYSTEM BETWEEN AERIAL TIP OR PLATFORM AND TURNTABLE
7. 3-IN-1 LYFE BRACKETS ON BASKET
8. AIR INLET WITH DISCONNECT COUPLING AT DRIVER STEP WELL OF CAB PER ORDER
9. AIR OUTLET WITH SHUT OFF VALVE AT DRIVER SIDE PUMP PANEL PER ORDER
10. SHORELINE RECEPTACLE WITH KUSSMAUL SUPER AUTO-EJECT AT DRIVER SIDE PUMP PANEL PER ORDER
11. ONE 120V RECEPTACLE IN COMPARTMENT PER ORDER

REV	DATE	BY	CH
D	28OCT22	JGA	JJR
C	12SEP22	JGA	JJR
B	08SEP22	JGA	JJR
A	02SEP22	JGA	JJR

CHASSIS DATA
MAKE: PIERCE
MODEL: ENFORCER

Pierce MANUFACTURING INC.

TITLE: 100'ASCENDANT AERIAL TOWER AND BODY ASSEMBLY
-
FOR: LAKE COUNTY FIRE RESCUE
TAVARES, FL

DWG NO. 37563AD-SH1

JOB NO.	37563
SCALE 1:24	DATE
DRAWN BY JGA	11MAY22
CHECKED BY JJR	13MAY22
SHEET SIZE D	SHEET NO. 1 OF 2

View File Created 28-OCT-2022 14:48:00