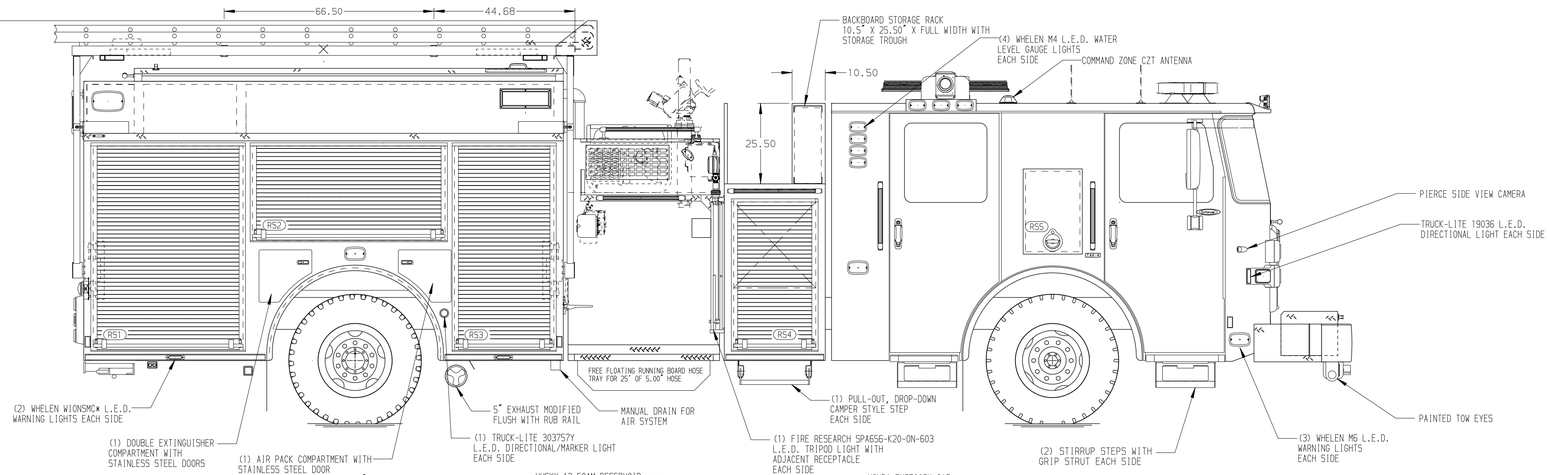

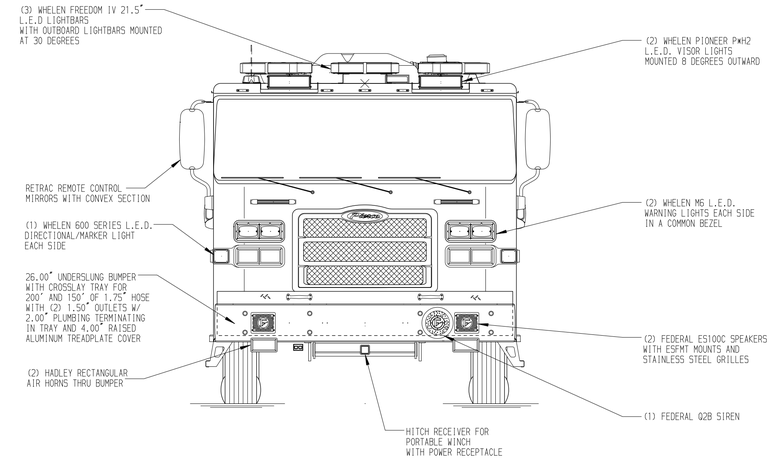

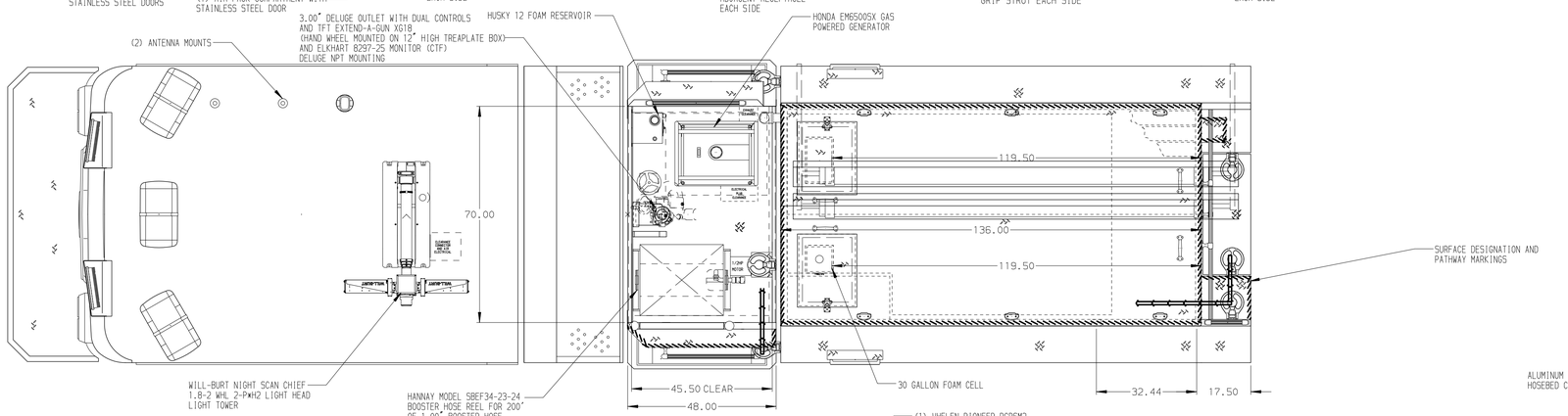

HOSEBED CAPACITIES

1. 1050' OF 5.00" HOSE
2. 200' OF 2.50" HOSE

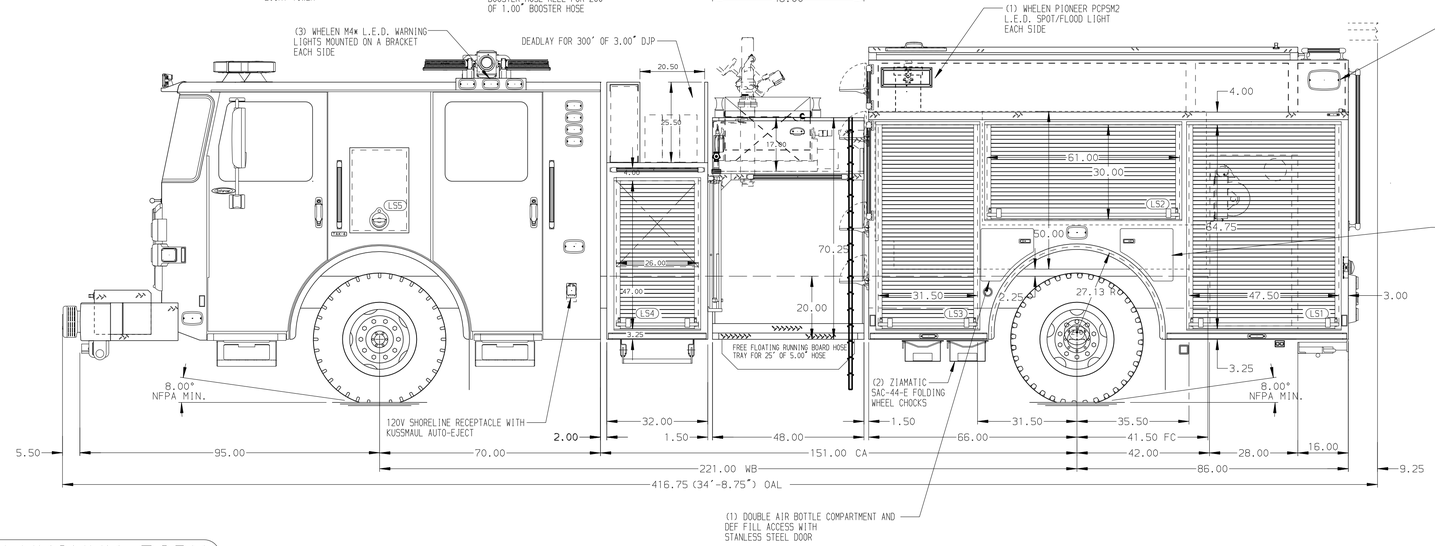

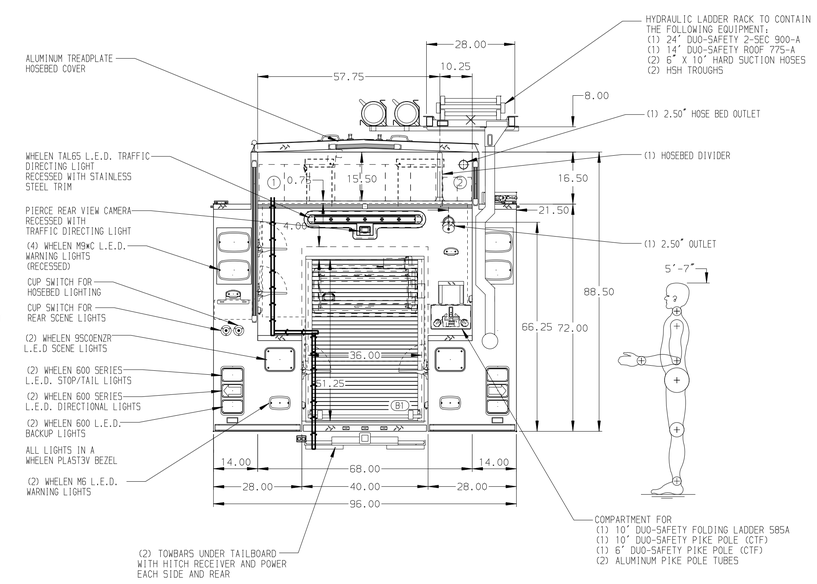

ALUMINUM BODY

NOTE

DIMENSIONS SHOWN ARE APPROXIMATE AND ARE SUBJECT TO MINOR DEVIATIONS AS MAY OCCUR OR BE NECESSARY IN CONSTRUCTION.
MINOR DETAILS NOT SHOWN.

1. AIR INLET WITH DISCONNECT COUPLING ON DRIVER'S SIDE STEP WELL
2. BATTERY CHARGER LOCATED BEHIND THE DRIVER'S SEAT
3. AMDOR AY-LB-12HW202 L.E.D. LIGHTS LOCATED BELOW ALUMINUM HOSE BED COVER
4. DRIP PAN GUARDS IN COMPARTMENTS PER ORDER
5. DUAL L.E.D. LIGHT STRIPS ON EACH SIDE OF ALL COMPARTMENT DOORS
6. SIX FULL WIDTH/DEPTH ADJUSTABLE SHELVES IN COMPARTMENTS PER ORDER
7. TWO FLOOR MOUNTED SLIDE-OUT TRAYS WITH SPECIAL HEIGHT SIDES LOCATED PER ORDER
8. ONE FLOOR MOUNTED LOCKING SLIDE-OUT TRAY WITH SPECIAL HEIGHT SIDES LOCATED PER ORDER
9. ONE SWINGOUT ALUMINUM TOOL BOARD LOCATED PER ORDER
10. ALUMINUM TREADPLATE ON FLOOR OF COMPARTMENTS PER ORDER
11. TOOLBOARD MOUNTED ON BACK WALL OF COMPARTMENT PER ORDER
12. CIRCUIT BREAKER PANEL IN COMPARTMENT PER ORDER
13. THREE RECEPTACLES IN COMPARTMENTS LOCATED PER ORDER
14. HANNAY ELFCR1636 CABLE REEL LOCATED IN REAR COMPARTMENT PER ORDER

REV	DATE	BY	CH
▽	-	-	-

CHASSIS DATA	TITLE	1500-D-1030P,1000 GAL OF WATER W/ 30 GAL FOAM CELL 152" BODY, DELUGE, HYDRAULIC LADDER RACK	
MAKE: PIERCE	FOR	EAST MANATEE FIRE RESCUE DISTRICT BRADENTON, FLORIDA	
MODEL: ENFORCER	DWG NO.	37576AD	

Pierce MANUFACTURING INC.

JOB NO.	37576
SCALE 1:24	DATE
DRAWN BY BTH	15AUG22
CHECKED BY CZA	23AUG22
SHEET SIZE D	SHEET NO. 1 OF 1

View File Created 23-AUG-2022 12:40:53