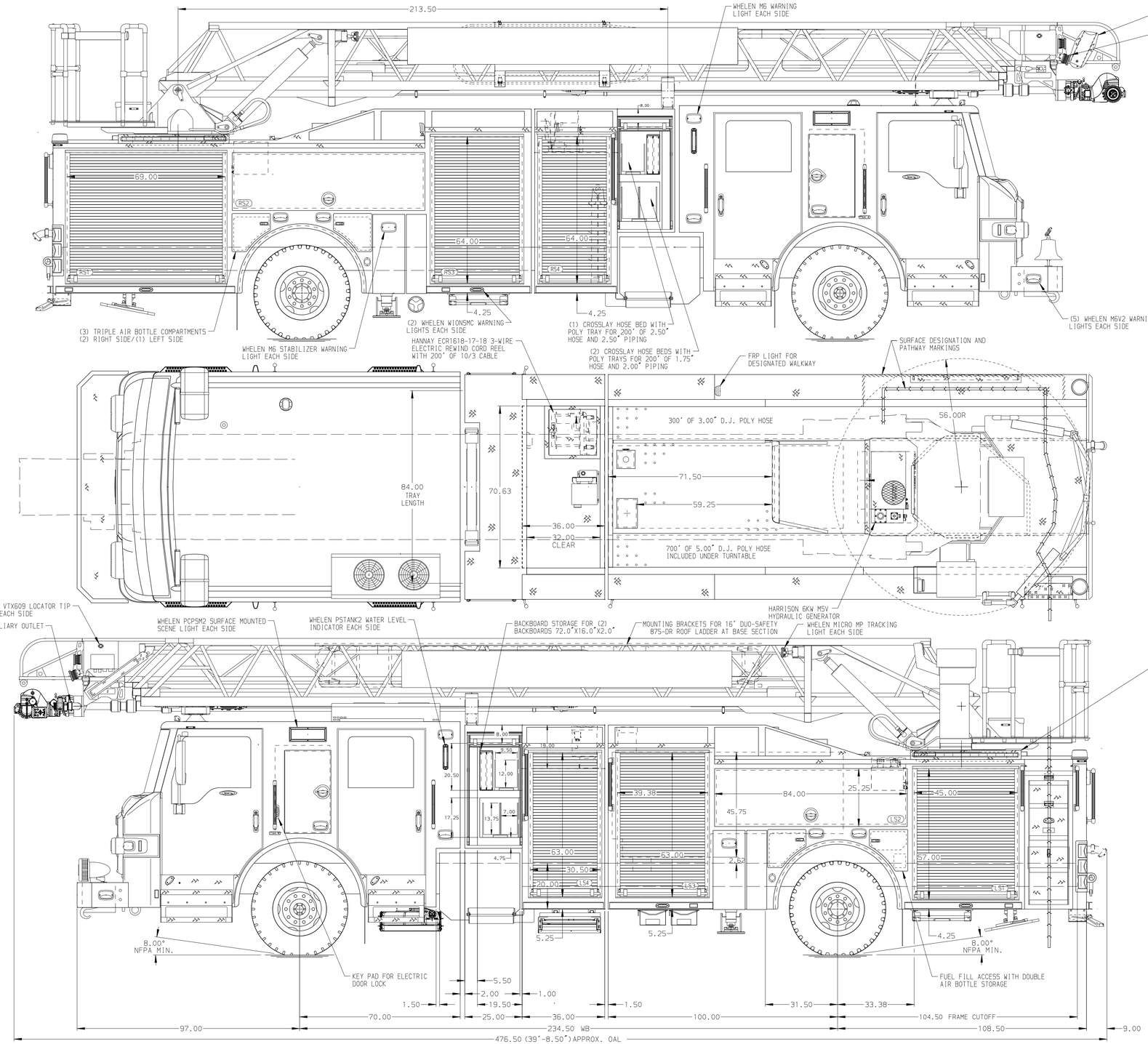

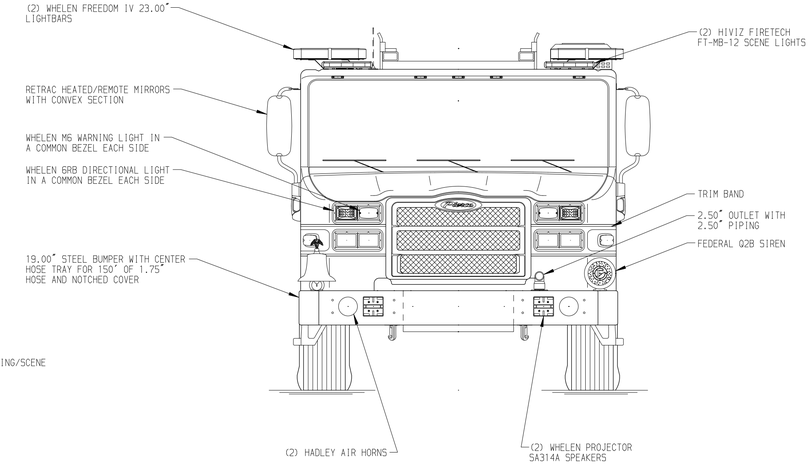

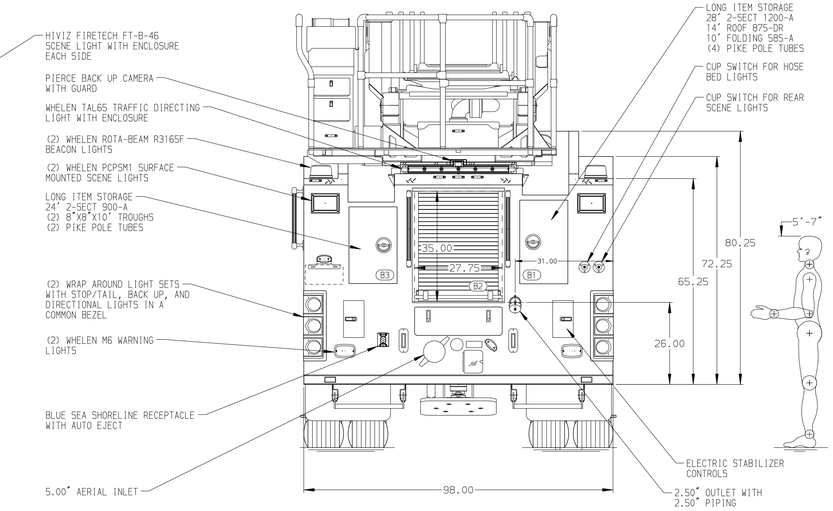

ALUMINUM BODY

NOTE

DIMENSIONS SHOWN ARE APPROXIMATE AND ARE SUBJECT TO MINOR DEVIATIONS AS MAY OCCUR OR BE NECESSARY IN CONSTRUCTION.
MINOR DETAILS NOT SHOWN.

1. TECNIQ RUNG STYLE LIGHTING ON AERIAL LADDER SECTIONS PER ORDER
2. BATTERY CHARGER LOCATED PER ORDER
3. NINE FULL WIDTH/DEPTH ADJUSTABLE SHELVES WITH SIDES LOCATED PER ORDER
4. ONE ADJUSTABLE TILT/SLIDE-OUT TRAY LOCATED PER ORDER
5. ONE CTECH THREE DRAWER CABINET LOCATED PER ORDER
6. TWO SLIDE-OUT TOOLBOARDS WITH PEGBOARD PATTERN LOCATED PER ORDER
7. ONE SWING-OUT TOOLBOARD WITH PEGBOARD PATTERN LOCATED PER ORDER
8. ONE VERTICAL PARTITION LOCATED PER ORDER
9. PEGBOARD WITH TRACKS ON REAR WALL PER ORDER
10. CIRCUIT BREAKER PANEL LOCATED PER ORDER
11. SUB FEED BREAKER BOX LOCATED PER ORDER
12. TWO RECEPTACLE BOXES WITH (4) RECEPTACLES IN CAB LOCATED PER ORDER
13. FOUR 120V DUPLEX RECEPTACLES IN REAR BODY COMPARTMENT LOCATED PER ORDER
14. MOUNTING BRACKETS AT THE AERIAL FLY SECTION FOR AN AXE
15. MOUNTING BRACKETS AT THE AERIAL FLY SECTION FOR 10' NUPLA RUBBISH HOOK PIKE POLE
16. FIRE RESEARCH 3-WAY INTERCOM SYSTEM BETWEEN PUMP PANEL, TURNTABLE, AND AERIAL TIP

REV	DATE	BY	CH
7	28APR23	BST	COS
6	01FEB23	ANZ	COS
5	01FEB23	ANZ	COS
4	15DEC22	BST	COS

CHASSIS DATA: MAKE: PIERCE; MODEL: VELOCITY

Pierce MANUFACTURING INC.

TITLE: 107' ASCENDANT ASL AERIAL LADDER AND BODY ASSEMBLY 500 GALLON TANK, 475 WATER/25 FOAM

FOR: PROSPER FIRE DEPARTMENT, PROSPER, TEXAS

DWG NO.: 37589AD

JOB NO.	37589
SCALE	1:24
DATE	
DRAWN BY	ANZ
06SEP22	
CHECKED BY	NDA
08SEP22	
SHEET SIZE	D
SHEET NO.	1 OF 1

View File Created 03-MAY-2023 13:20:18