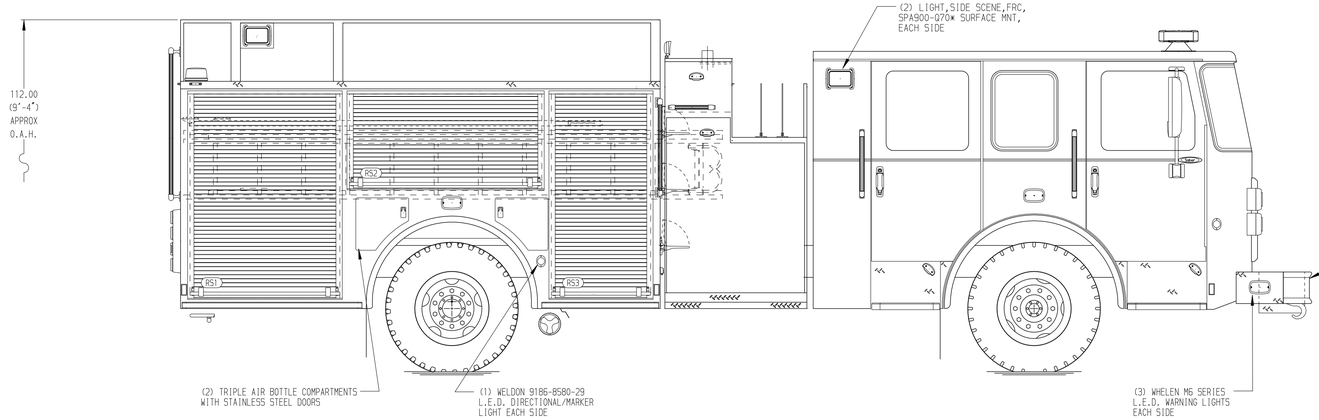

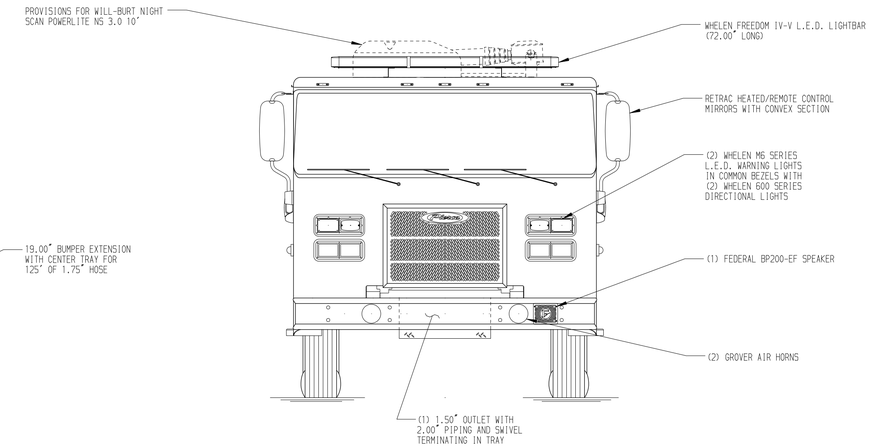

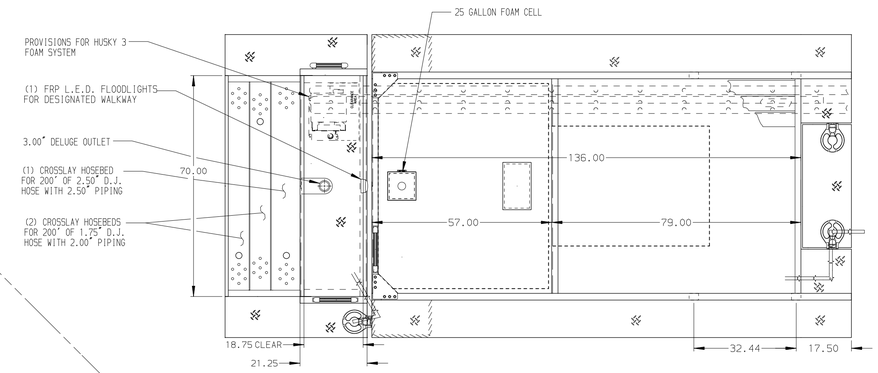

HOSEBED CAPACITIES

1. 1000' OF 5.00" D.J.POLY HOSE
2. 500' OF 2.50" D.J.POLY HOSE

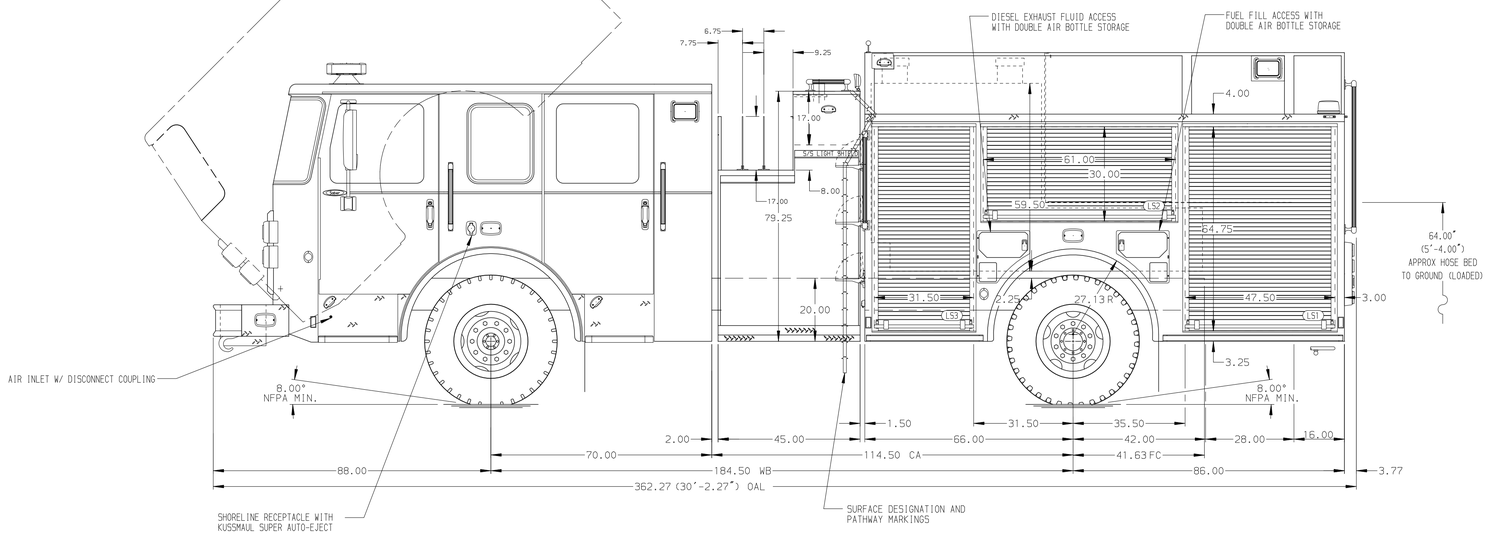

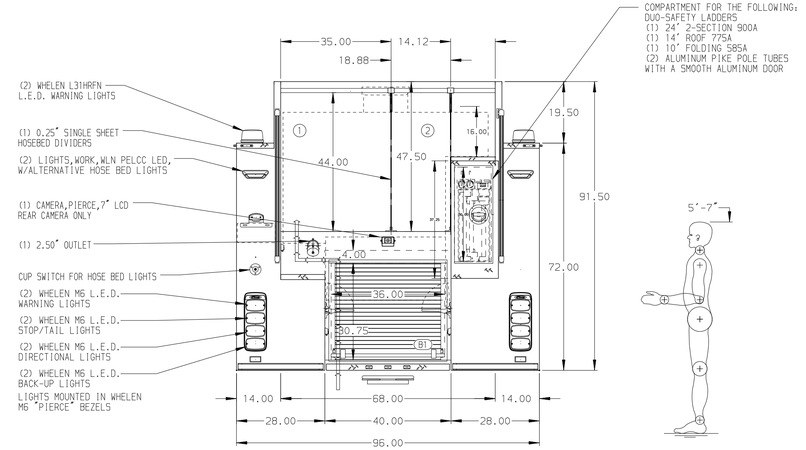

ALUMINUM BODY

NOTE

DIMENSIONS SHOWN ARE APPROXIMATE AND ARE SUBJECT TO MINOR DEVIATIONS AS MAY OCCUR OR BE NECESSARY IN CONSTRUCTION.
MINOR DETAILS NOT SHOWN.

REV	DATE	BY	CH
▽	-	-	-

CHASSIS DATA	TITLE	1500-D-750P,725G WATER 25G FOAM,152"NEW YORK STYLE PUMPER,(2) CROSSLAYS, 45" PUMPHOUSE, DELUGE	
MAKE PIERCE	FOR	PIERCE FIELD UNIT BRADENTON, FLORIDA	
MODEL SABER FR	DWG NO.	37604AD	

Pierce MANUFACTURING INC.
BRADENTON, FLORIDA

JOB NO.	37604
SCALE 1:24	DATE
DRAWN BY RHU	10DEC21
CHECKED BY CGA	13DEC21
SHEET SIZE D	SHEET NO. 1 OF 1

View File Created 13-DEC-2021 13:27:19