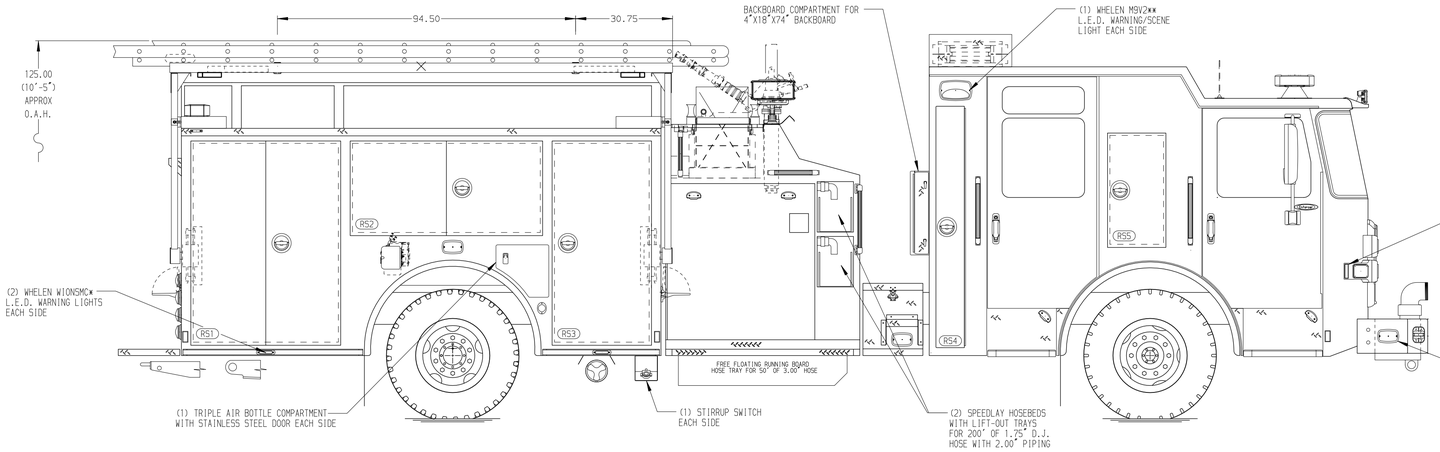

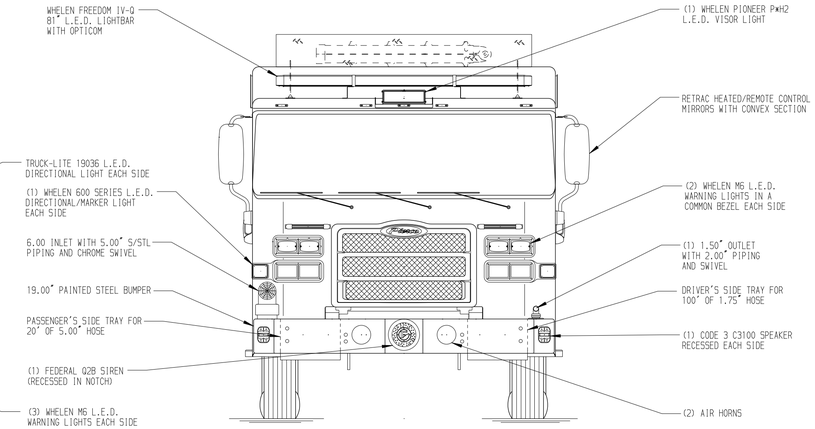

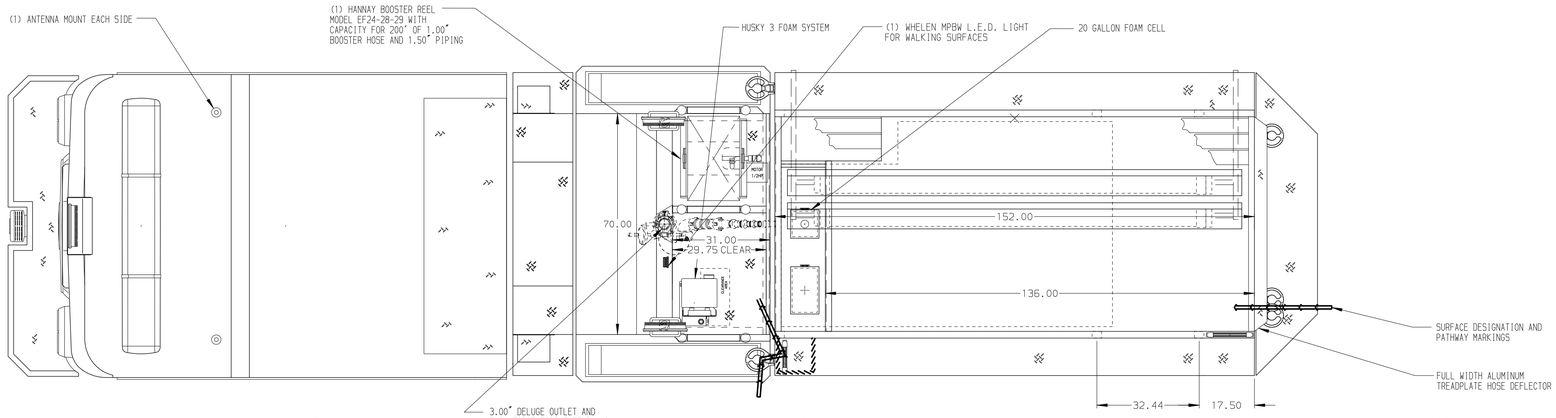

HOSEBED CAPACITIES

1. 250' OF 2.50" D.J. POLY HOSE
2. 500' OF 3.00" D.J. POLY HOSE
3. 800' OF 5.00" D.J. POLY HOSE
4. (2) 100' BUNDLES OF 1.75" HOSE W/ GATED WYE
5. (2) 50' BUNDLES OF 2.50" HOSE W/ NOZZLE IN POLY TRAY (10"W X 7"H X 114"L)

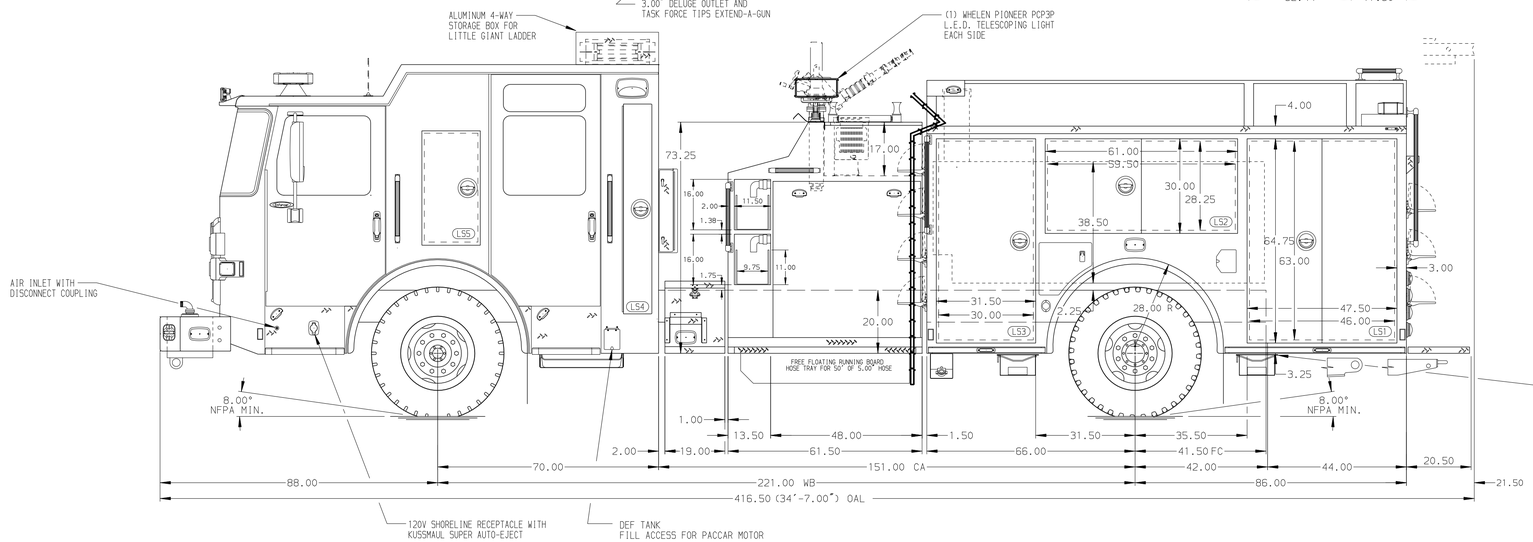

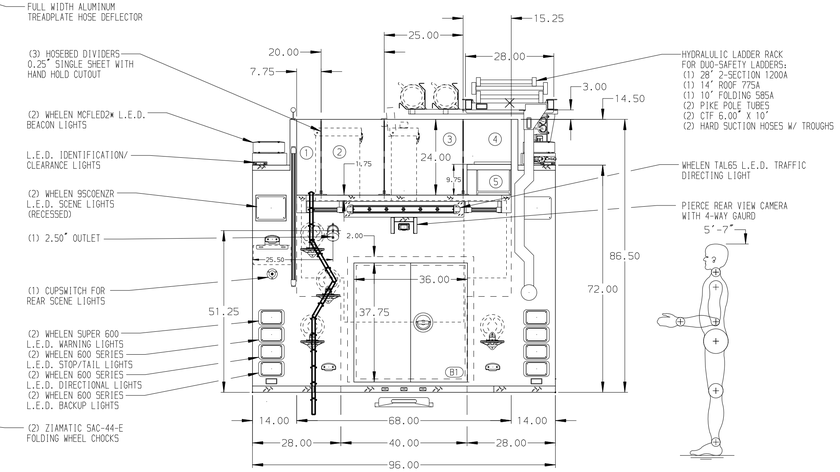

ALUMINUM BODY

SIDE ROLL AND FRONTAL IMPACT PROTECTION

NOTE

DIMENSIONS SHOWN ARE APPROXIMATE AND ARE SUBJECT TO MINOR DEVIATIONS AS MAY OCCUR OR BE NECESSARY IN CONSTRUCTION.
MINOR DETAILS NOT SHOWN.

1. ONSPOT AUTOMATIC TIRE CHAINS TO BE PROVIDED AT REAR
2. PACCAR DEF TANK MOUNTED UNDER CAB ON THE DRIVER'S SIDE
3. BATTERY CHARGER/COMPRESSOR LOCATED IN COMPARTMENT PER SHOP ORDER
4. BATTERY CHARGER INDICATOR LOCATED ON DRIVER'S SEAT RISER
5. REVERSED HINGED DOOR ON COMPARTMENT PER SHOP ORDER
6. NINE FULL WIDTH/DEPTH ADJUSTABLE SHELF IN COMPARTMENT PER SHOP ORDER
7. THREE ADJUSTABLE SLIDE-OUT TRAY IN COMPARTMENT PER SHOP ORDER
8. ONE FLOOR MOUNTED SLIDE-OUT TRAY IN COMPARTMENT PER SHOP ORDER
9. SWING-OUT TOOL BOARD WITH PEGBOARD PATTERN IN COMPARTMENT PER SHOP ORDER
10. PARTITION BETWEEN COMPARTMENTS LS1/B1 AND RS1/B1
11. ONE VERTICAL PARTITION IN COMPARTMENT PER SHOP ORDER
12. REMOVEABLE FILTER FOR ALL BODY COMPARTMENTS WITH LOUVERS
13. ALUMINUM PEGBOARD ON BACK WALL OF COMPARTMENT PER SHOP ORDER
14. TWO RECEPTACLES PER SHOP ORDER

REV	DATE	BY	CH
-	-	-	-

CHASSIS DATA
MAKE: PIERCE
MODEL: ENFORCER

Pierce MANUFACTURING INC.

TITLE: 1500-D-750 GAL POLY W/20 GAL FOAM CELL, 152" FDLER (2)SPEEDLAYS, DELUGE, BOOSTER REEL, HYD LADDER RACK
FOR: MERIDIAN FIRE DEPARTMENT, MERIDIAN, IDAHO
DWG NO.: 37628AD

JOB NO.	37628 (01-03)
SCALE	1:24
DATE	
DRAWN BY	ARI 27JUL22
CHECKED BY	KBO 03AUG22
SHEET SIZE	D
SHEET NO.	1 OF 1

View File Created 03-AUG-2022 09:55:48