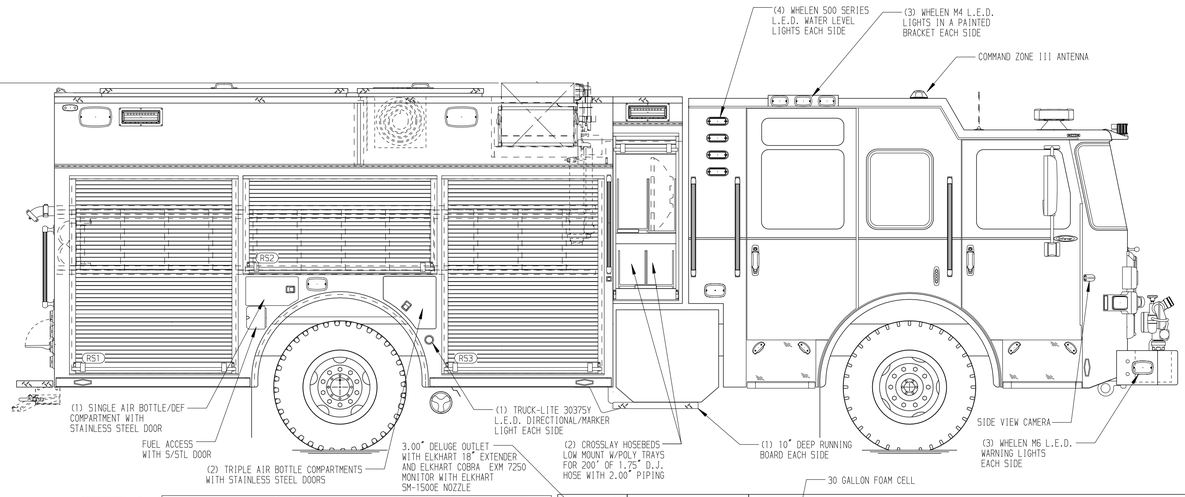

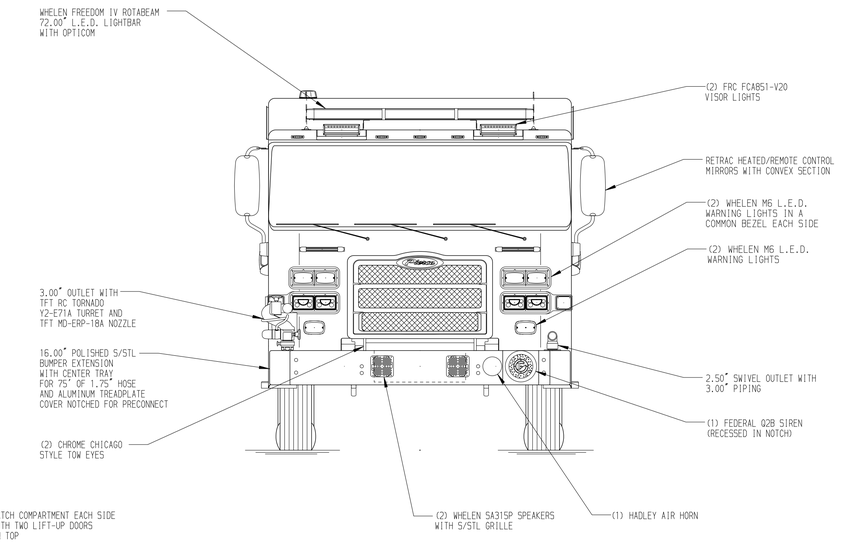

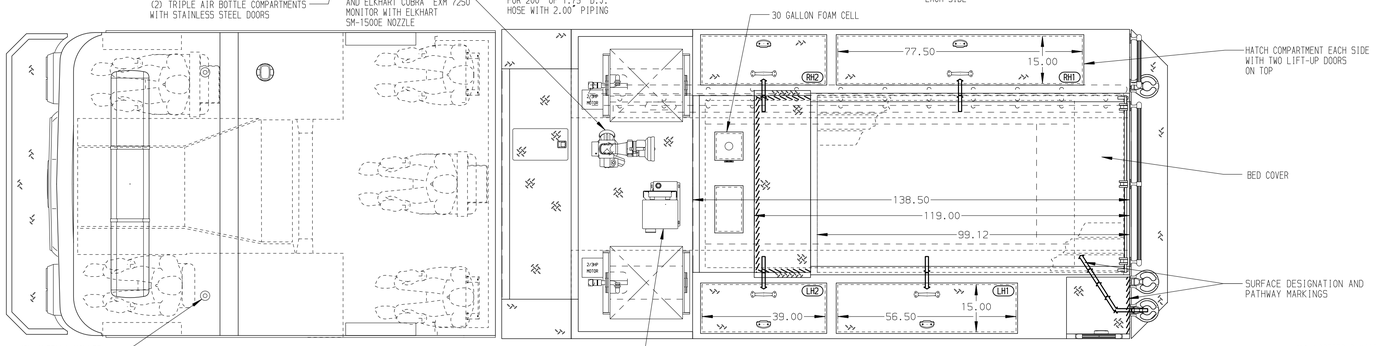

HOSEBED CAPACITIES

1. 750' OF 4.00" D.J. POLY HOSE
2. 750' OF 2.50" D.J. POLY HOSE

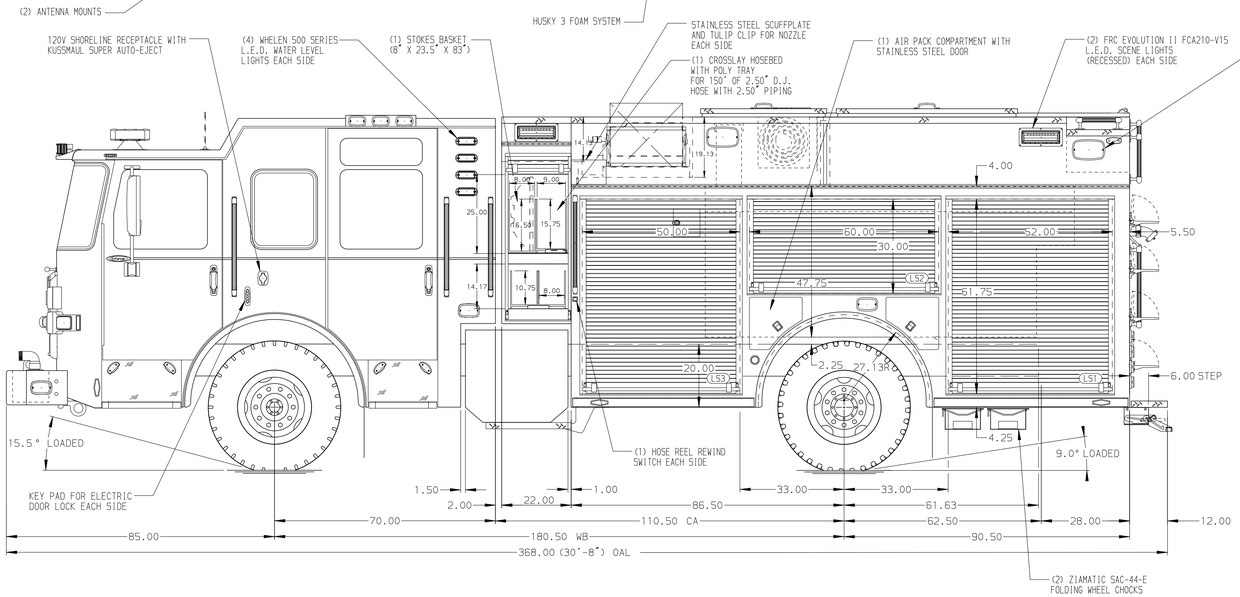

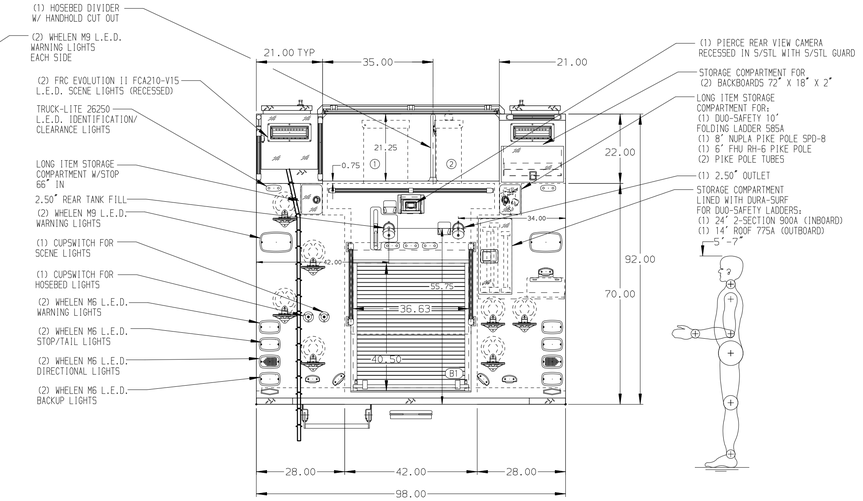

OVERALL HEIGHT - 122.00"	OVERALL WIDTH - 117.75"	BODY MATERIAL - ALUMINUM
MAX OAL - 372.00"	WHEELBASE - 180.50"	CAB TO AXLE - 110.50"

ALUMINUM BODY

MAXIMUM O.A.L. 372.00"

MAXIMUM O.A.H. 122.00"

Pierce MANUFACTURING INC.

JOB NO.	37659		
SCALE 1:24	DATE		
TITLE	1500-D-780,750 GAL WATER W/30 GAL FOAM, 177" RESCUE (4)XLAYS, DELUGE, BOOSTER REELS, LADDERS THRU BODY	DRAWN BY LME	26APR22
FOR	COUNTY OF MAUI FIRE DEPARTMENT MAUI, HAWAII	CHECKED BY NPE	05MAY22
DWG NO.	37659AD-SH1	SHEET SIZE D	SHEET NO. 1 OF 2

NOTE

DIMENSIONS SHOWN ARE APPROXIMATE AND ARE SUBJECT TO MINOR DEVIATIONS AS MAY OCCUR OR BE NECESSARY IN CONSTRUCTION.
MINOR DETAILS NOT SHOWN.

1. S/STL SCUFFPLATE ON EACH CAB DOOR JAMB
2. BATTERY CHARGER LOCATED BEHIND DRIVERS ON CAB EMS COMPARTMENT
3. BATTERY CHARGE INDICATOR LOCATED ON DRIVER'S SEAT RISER
4. PULL STRAPS W/FOOTMAN LOOPS FOR SIDE COMPARTMENT DOORS INCLUDING CROSSLAY DOORS
5. 12V L.E.D. LIGHT STRIPS LOCATED IN HOSEBED
6. S/STL SCUFFPLATE ON FRONT BULKHEADS
7. S/STL SCUFFPLATE AROUND DEF AND FUEL FILL OPENINGS
8. S/STL SCUFFPLATE ON FRONT CORNERS OF BODY
9. S/STL SCUFFPLATE AROUND AIR BOTTLE COMPARTMENT OPENINGS
10. S/STL SCUFFPLATE ON THE FRONT FACE OF THE CROSSLAY AREA
11. S/STL SCUFFPLATE ON VERTICAL SURFACES OF REAR STEP AREA OF HATCH
12. TWO HANNAY BOOSTER REELS MODEL SBEF30-23-24 LOCATED IN CARGO AREA EACH WITH 150' OF 1.00" BOOSTER HOSE
13. WHELEN HOWLER AUXILIARY SIREN (SPEAKER SYSTEM BEHIND RIGHT SIDE OF FRONT BUMPER)
14. S/STL SCUFFPLATES REAR CAB CORNERS
15. S/STL SCUFFPLATES REAR BODY CORNERS

REV	DATE	BY	CH
4	04NOV22	LME	NPE
3	26AUG22	LME	NPE
2	18AUG22	LME	NPE

CHASSIS DATA
MAKE: PIERCE
MODEL: ENFORCER

View File Created 14-NOV-2022 09:29:01