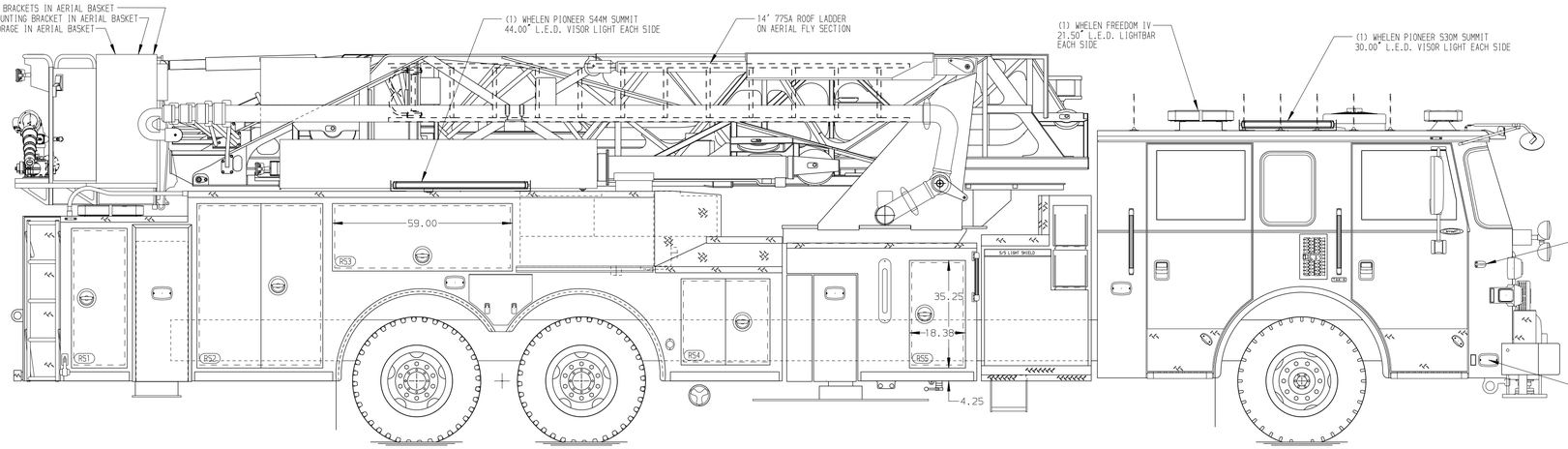

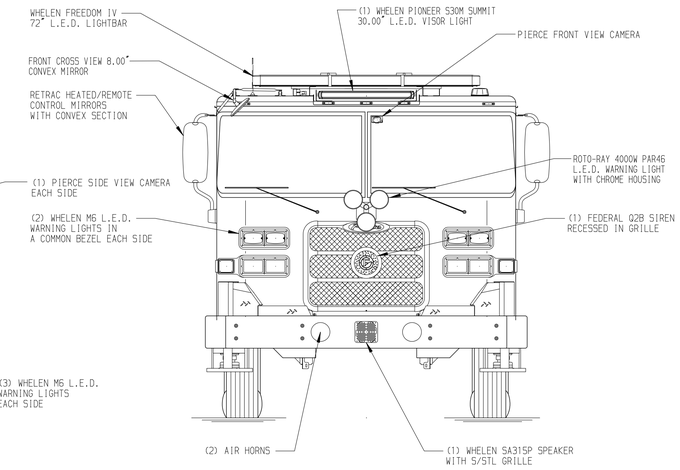

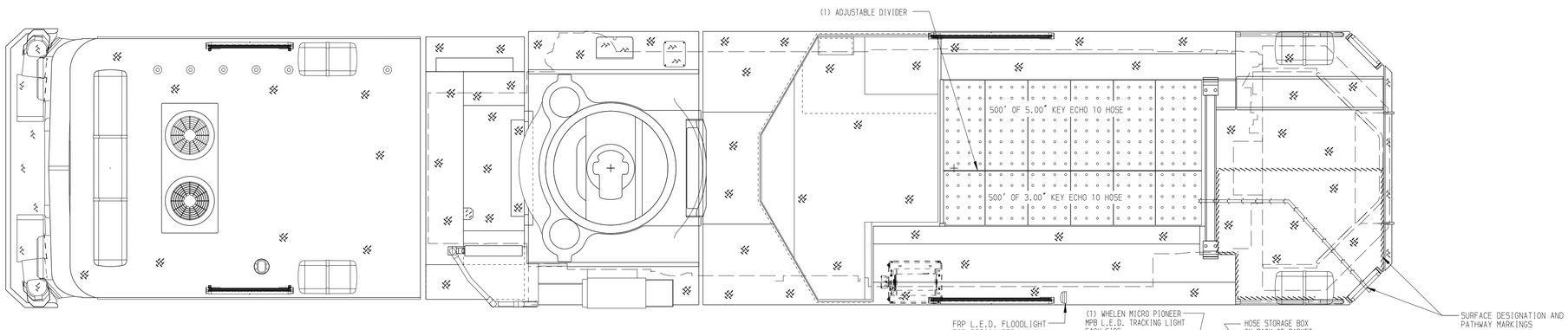

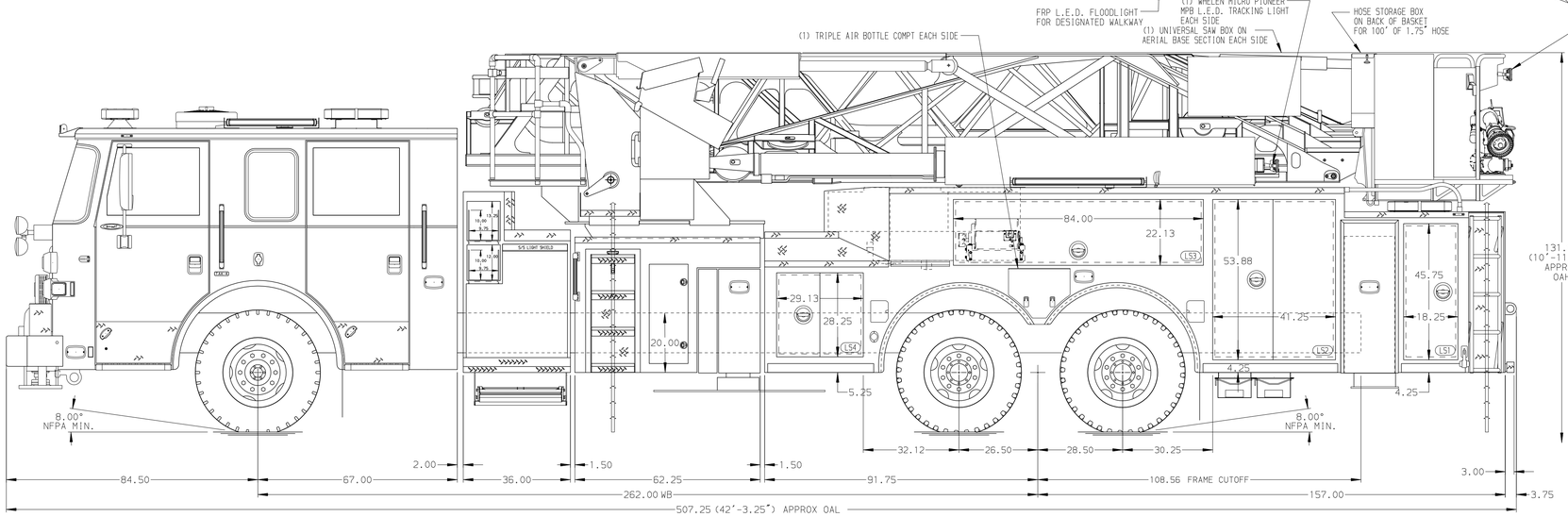

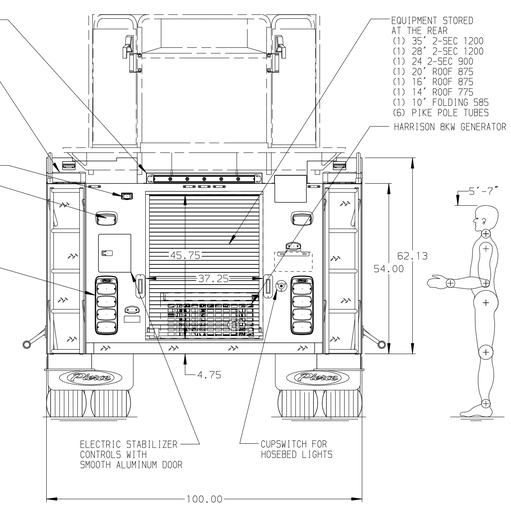

ALUMINUM BODY | MAXIMUM O.A.L. = 506.50" (42'-2.50") - EXCEEDED | SIDE ROLL AND FRONTAL IMPACT PROTECTION

CUSTOMER APPROVAL

APPROVED BY: _____

DATE: _____

Pierce MANUFACTURING INC.

NOTE

DIMENSIONS SHOWN ARE APPROXIMATE AND ARE SUBJECT TO MINOR DEVIATIONS AS MAY OCCUR OR BE NECESSARY IN CONSTRUCTION.
MINOR DETAILS NOT SHOWN.

1. SHORELINE RECEPTACLE WITH KUSSMAUL SUPER AUTO-EJECT LOCATED ON DRIVER SIDE OF THE CAB
2. AIR INLET WITH DISCONNECT COUPLING IN THE DRIVER SIDE STEPWELL
3. BATTERY CHARGER LOCATED IN COMPARTMENT PER ORDER
4. BATTERY CHARGE INDICATOR LOCATED BEHIND DRIVER SEAT WITH BRACKET PER ORDER
5. SIX ADJUSTABLE SHELVES LOCATED IN COMPARTMENTS PER ORDER
6. WHELEN 3SCOCDCR LIGHT STRIPS IN COMPARTMENTS PER ORDER
7. FOUR ADJUSTABLE SLIDE-OUT TRAYS LOCATED IN COMPARTMENTS PER ORDER
8. NON-RAISED AERIAL PEDESTAL
9. 3-in-1 LYFECOMBO BRACKETS AT AERIAL BASKET
10. TECNIQ RUNG LIGHTING ON AERIAL DEVICE
11. FIRE RESEARCH 2-WAY INTERCOM

REV	DATE	BY	CH
▽	-	-	-

CHASSIS DATA: MAKE: PIERCE — MODEL: ARROW XT

TITLE: 100' ASCENDANT AERIAL TOWER AND BODY ASSEMBLY
300 GALLON WATER TANK

FOR: COLCHESTER HAYWARD FIRE DEPARTMENT
COLCHESTER, CT

DWG NO.: 37679AD

JOB NO.	37679
SCALE	1:24
DATE	
DRAWN BY	ANZ
04NOV22	
CHECKED BY	BYO
08NOV22	
SHEET SIZE	D
SHEET NO.	1 OF 1

View File Created 08-NOV-2022 08:39:53