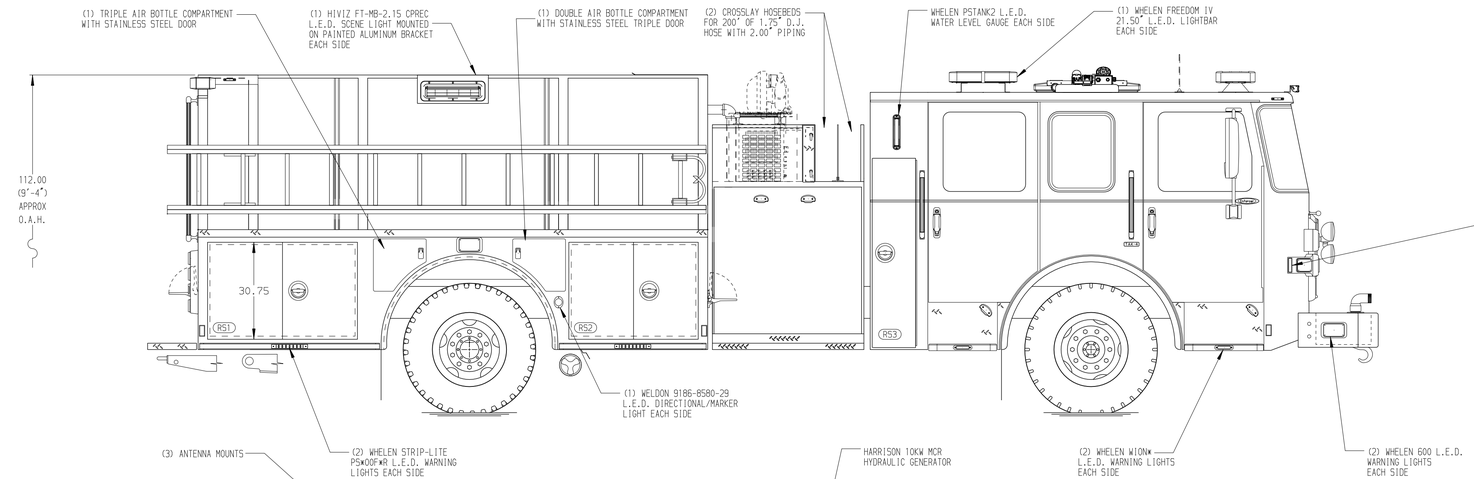

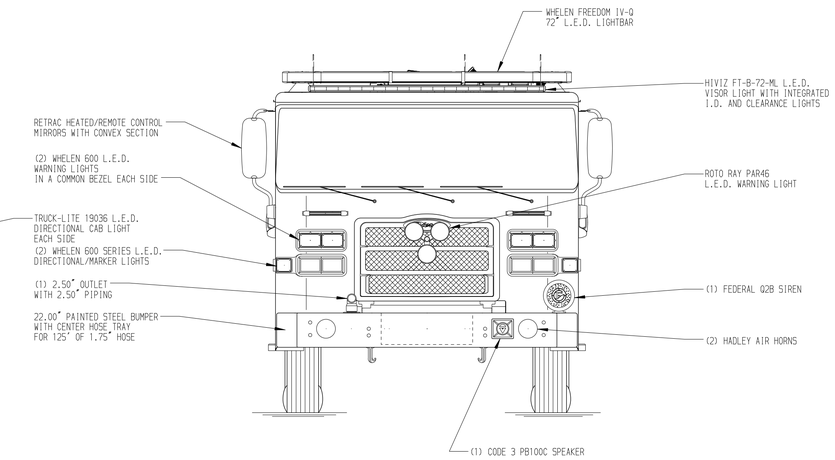

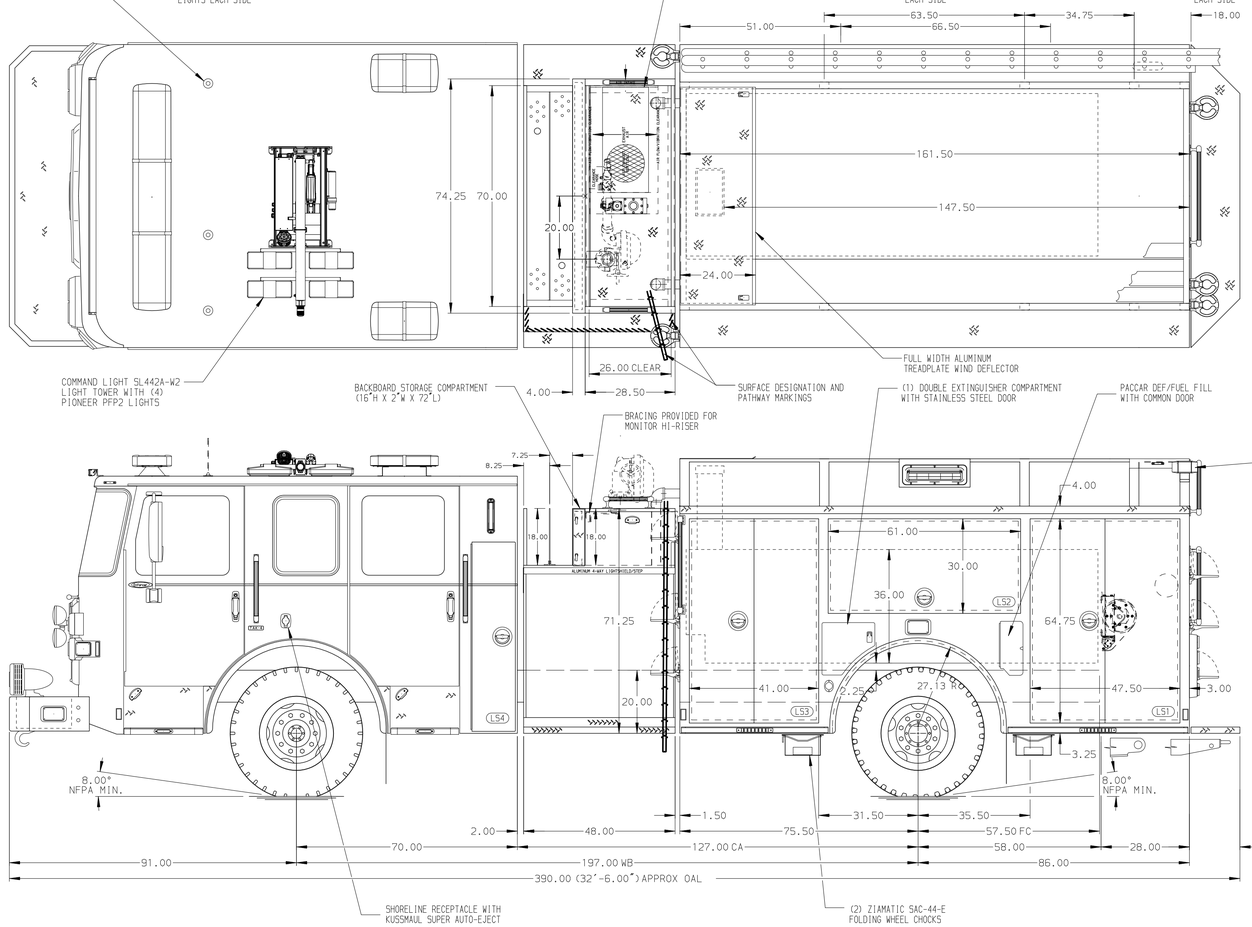

HOSEBED CAPACITIES

1. 200' OF 2.50" D.J. POLY HOSE
2. 600' OF 3.00" D.J. POLY HOSE
3. 1200' OF 5.00" D.J. POLY HOSE
4. 400' OF 2.50" D.J. POLY HOSE

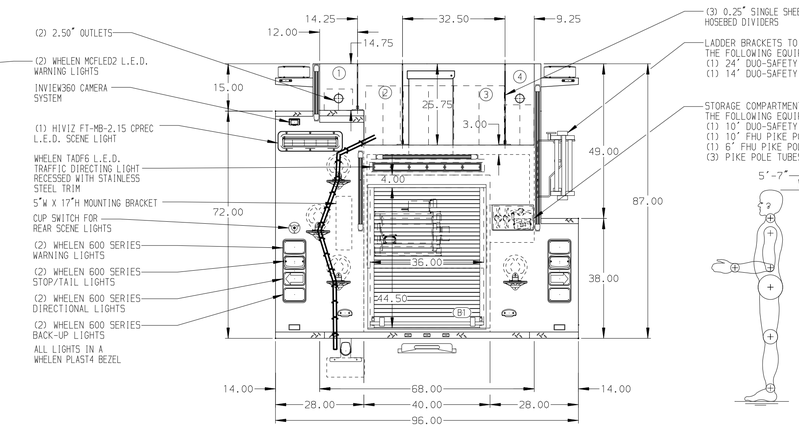

ALUMINUM BODY | MAXIMUM O.A.H. 114" | MAXIMUM O.A.L. 32'-6.00" | FRONTAL IMPACT PROTECTION

NOTE

DIMENSIONS SHOWN ARE APPROXIMATE AND ARE SUBJECT TO MINOR DEVIATIONS AS MAY OCCUR OR BE NECESSARY IN CONSTRUCTION.
MINOR DETAILS NOT SHOWN.

1. BATTERY CHARGER INDICATOR LOCATED ON DRIVER'S SEAT RISER
2. CIRCUIT BREAKER PANEL IN COMPARTMENT LS3
3. ONE HANNAY ELECTRIC REWIND CORD REEL MODEL 1624-10-11-6 LOCATED IN B1 FOR 200' OF 10/3 CORD
4. ONE 120V DUPLEX RECEPTACLE LOCATED PER ORDER

REV	DATE	BY	CH
7	06FEB23	BTH	JGO
6	06JAN23	BTH	JGO
5	07OCT22	BTH	PHA

CHASSIS DATA
MAKE: PIERCE
MODEL: ENFORCER

Pierce MANUFACTURING INC.

TITLE: 1500-D-750G TANK, 161" BODY, LS FHFD, RS LOW FDLER LADDER BRACKET RS, (2) XLAYS, GENERATOR, CORD REEL
FOR: SIMPSONVILLE FIRE DEPARTMENT, SIMPSONVILLE, SOUTH CAROLINA
DWG NO.: 37705AD

JOB NO.	37705
SCALE	1:24
DATE	
DRAWN BY	BTH 28SEP22
CHECKED BY	PHA 30SEP22
SHEET SIZE	D
SHEET NO.	1 OF 1

View File Created 15-FEB-2023 07:00:16