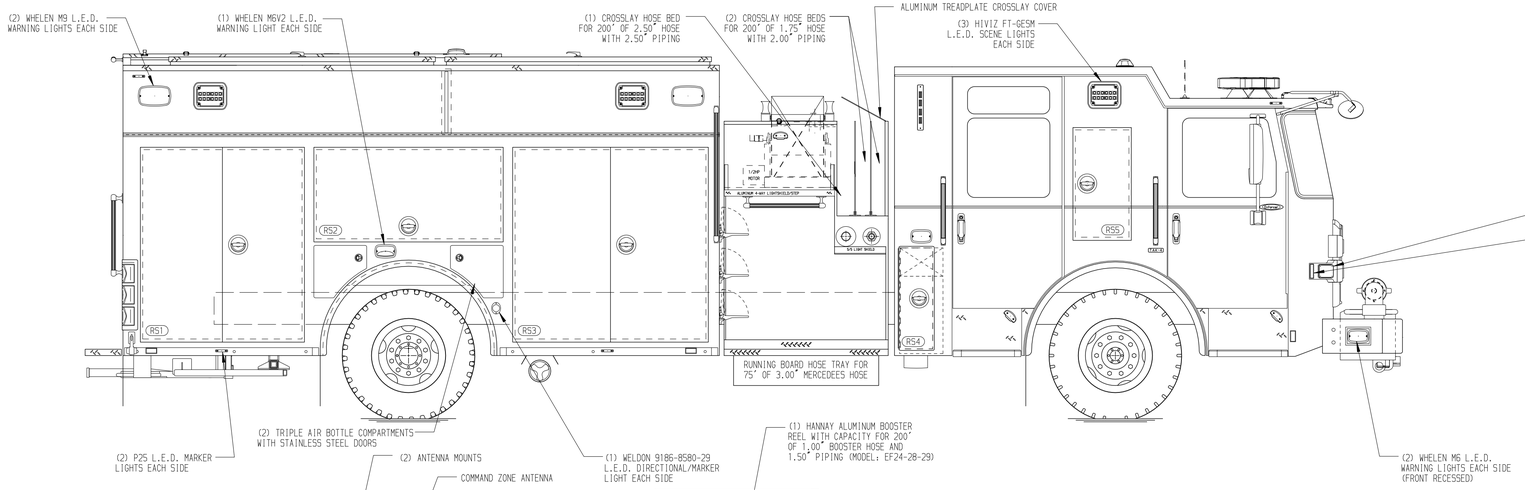

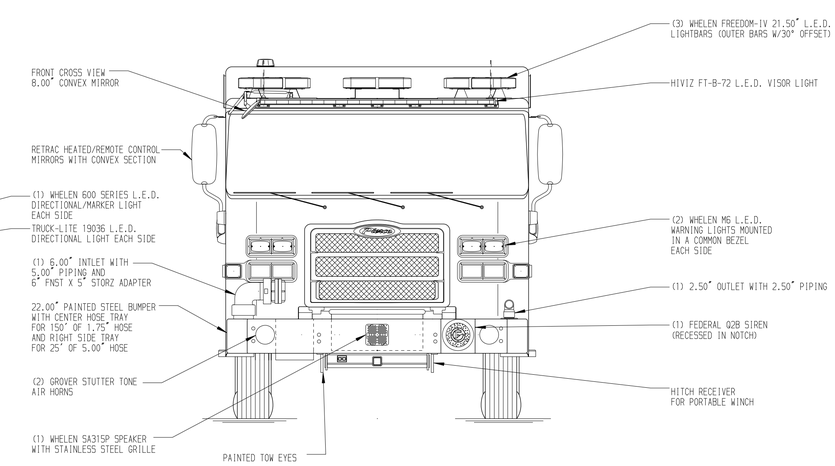

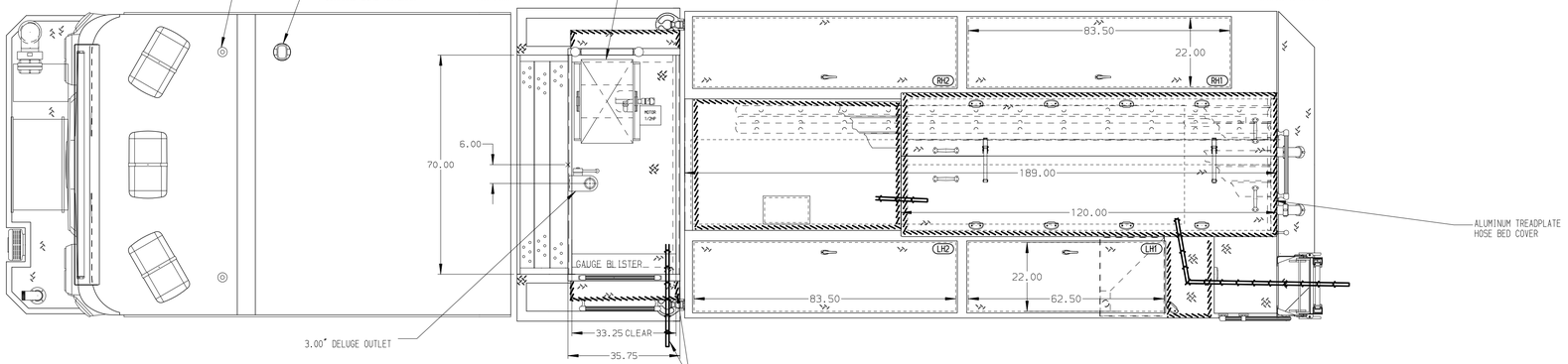

HOSEBED CAPACITIES

1. 400' OF 1.75" MERCEDEES HOSE
2. 1000' OF 5.00" MERCEDEES HOSE
3. 600' OF 3.00" MERCEDEES HOSE

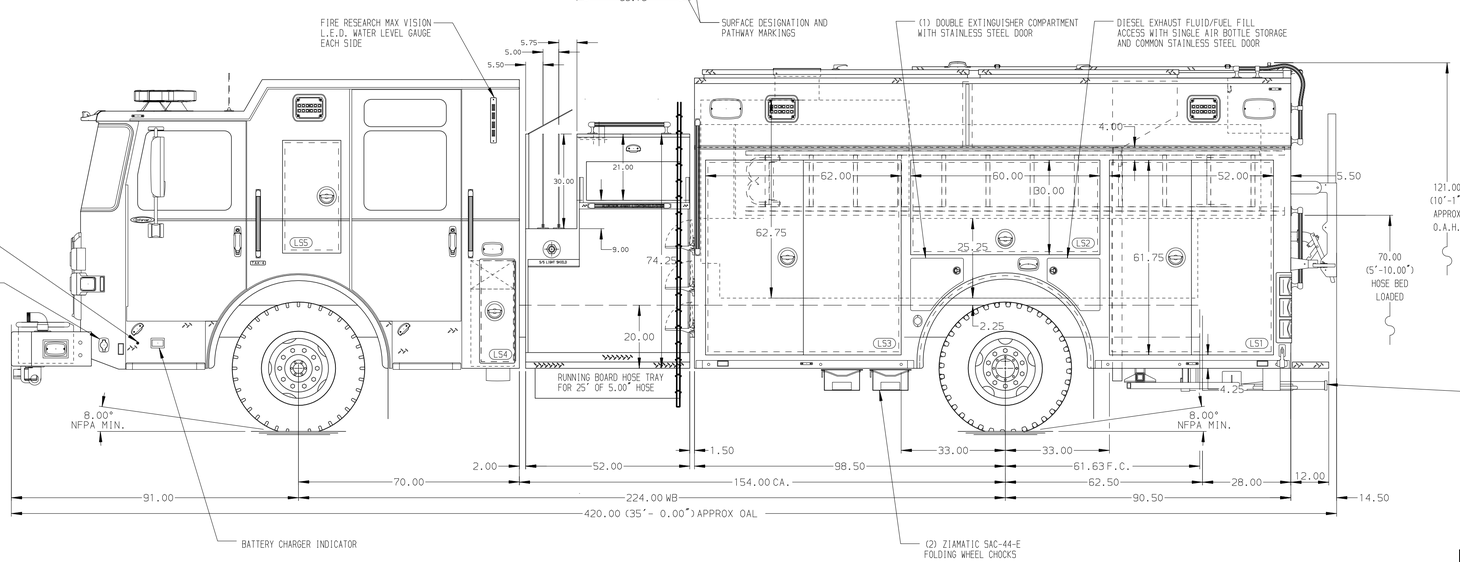

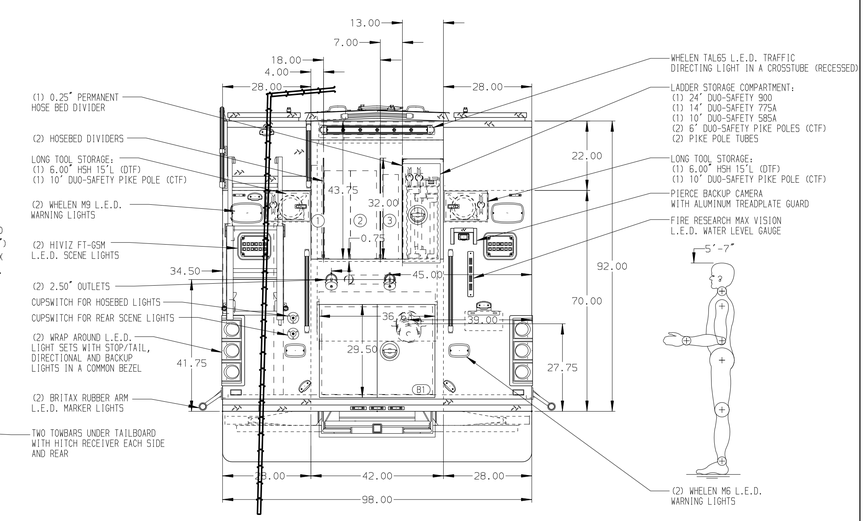

ALUMINUM BODY

SIDE ROLL AND FRONTAL IMPACT PROTECTION

NOTE

DIMENSIONS SHOWN ARE APPROXIMATE AND ARE SUBJECT TO MINOR DEVIATIONS AS MAY OCCUR OR BE NECESSARY IN CONSTRUCTION.
MINOR DETAILS NOT SHOWN.

1. ONSPOT AUTOMATIC TIRE CHAINS TO BE PROVIDED AT REAR
2. KUSSMAUL BATTERY CHARGER/AIR COMPRESSOR LOCATED PER ORDER
3. BATTERY CHARGER LOCATED BEHIND DRIVER'S SEAT

REV	DATE	BY	CH
▽	-	-	-

CUSTOMER APPROVAL

APPROVED BY: _____

DATE: _____

Pierce MANUFACTURING INC.

CHASSIS DATA	
MAKE	PIERCE
MODEL	ENFORCER
TITLE	2000-D-750 GAL POLY, 189" HDRP BODY LADDERS IN HOSE BED , (3) CROSSLAYS, DELUGE
FOR	WARRIOR RUN AREA FIRE DEPARTMENT WATSONTOWN, PENNSYLVANIA
DWG NO.	37727AD-SH1
JOB NO.	37727
SCALE	1:24
DATE	
DRAWN BY	KLE 27JAN23
CHECKED BY	CDU 30JAN23
SHEET SIZE	D
SHEET NO.	1 OF 2

View File Created 30-JAN-2023 11:26:02