RIGHT SIDE COMPARTMENTS CONTAIN THE FOLLOWING:

COMPARTMENT RS1 CONTAINS:
- (1) SHELF,ADJUSTABLE,500LB CAP
- PAC TRAC,INSTALLED ON BACK WALL ONLY RESCUE.PMFD,FULL WIDTH & HEIGHT
- (1) TRAY,FLOOR MOUNTED,SLIDE-OUT LOW/SPECIAL SIDE HEIGHT,6" SIDES

COMPARTMENT RS2 CONTAINS:
- (1) SHELF,ADJUSTABLE,500LB CAP 1/2 DEPTH OF TRANSVERSE COMPT
- (1) TRAY,FLOOR MOUNTED,ONE-WAY SLIDE OUT, 500LB,3"SIDES,1/2 TRANS

COMPARTMENT RS4 CONTAINS:
- (1) SHELF,ADJUSTABLE,500LB CAP 1/2 DEPTH OF TRANSVERSE COMPT
- (1) TRAY,FLOOR MOUNTED,UTILITY,ONE-WAY SLIDE OUT,500LB,3"SIDES,1/2 TRANS
- (1) EXTENDED COMPARTMENT FLOOR BOLT IN STYLE
- DRAWER ASSEMBLY,CTECH,TWO DRAWERS,UP TO 48" WIDE,RESCUE PMFD

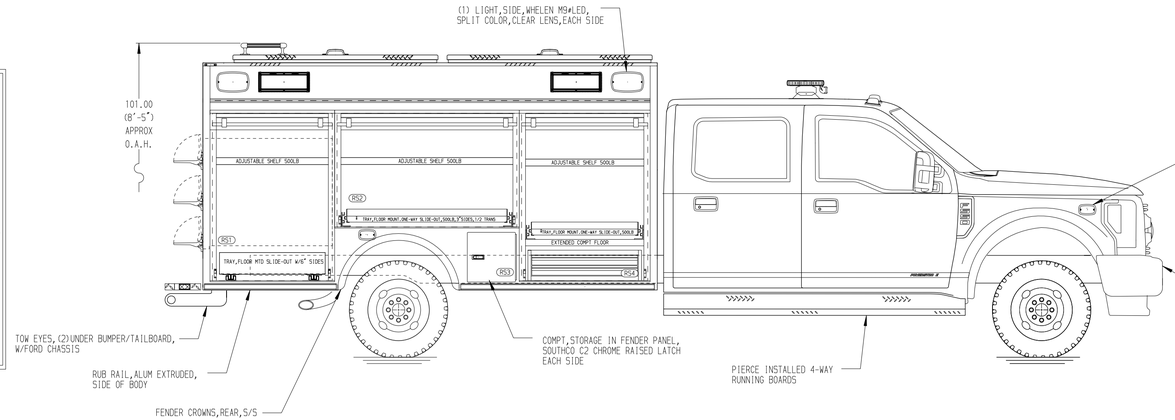

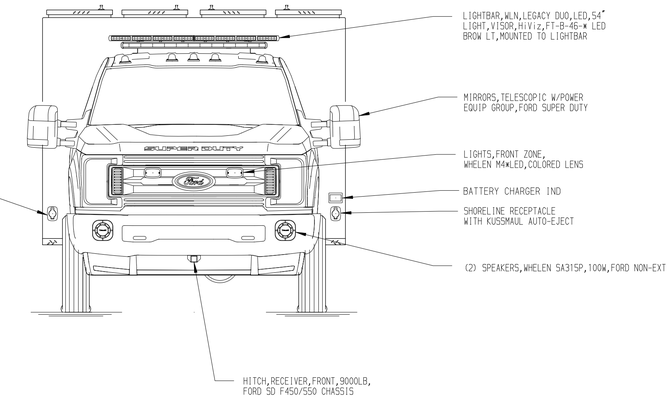

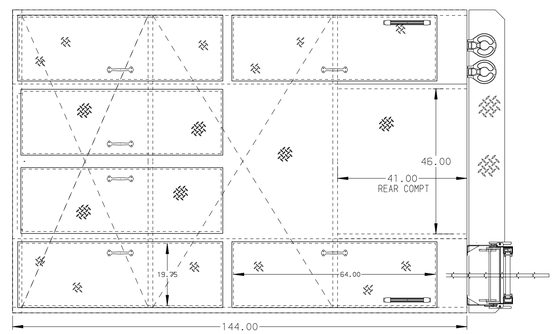

REAR COMPARTMENT B1 CONTAINS THE FOLLOWING:
- (1)TRAY,FLOOR MOUNTED,SLIDE-OUT, FULL WIDTH/FULL DEPTH,500 LBS,2"SIDES
- (1) SHELF,ADJUSTABLE,500LB CAP

LEFT SIDE COMPARTMENTS CONTAIN THE FOLLOWING:

COMPARTMENT LS1 CONTAINS:
- PAC TRAC,INSTALLED ON BACK WALL ONLY RESCUE.PMFD
- (1) TRAY,FLOOR MOUNTED,SLIDE-OUT LOW/SPECIAL SIDE HEIGHT,6" SIDES

COMPARTMENT LS2 CONTAINS:
- (1) SHELF,ADJUSTABLE,500LB CAP 1/2 DEPTH OF TRANSVERSE COMPT
- (1) TRAY,FLOOR MOUNTED,ONE-WAY SLIDE OUT, 500LB,3"SIDES,1/2 TRANS

COMPARTMENT LS4 CONTAINS:
- (1) TRAY,FLOOR MOUNTED,UTILITY,ONE-WAY SLIDE OUT,500LB,3"SIDES,1/2 TRANS
- (1) INVERTER,XANTREX FREEDOM X,817-3000 3000W,NON-NFPA
- (1) EXTENDED COMPARTMENT FLOOR BOLT IN STYLE
- (1) SHELF,ADJUSTABLE,500LB CAP
- DRAWER ASSEMBLY,CTECH,TWO DRAWERS,UP TO 48" WIDE,RESCUE PMFD

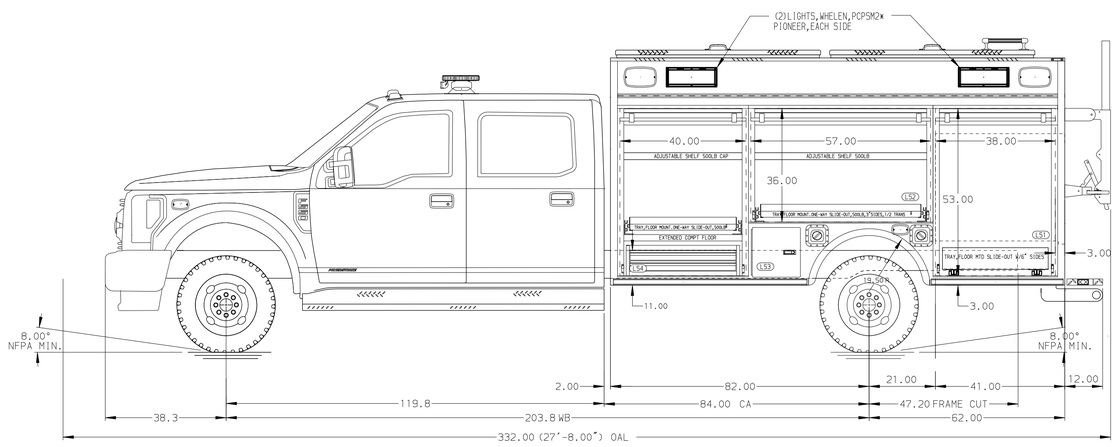

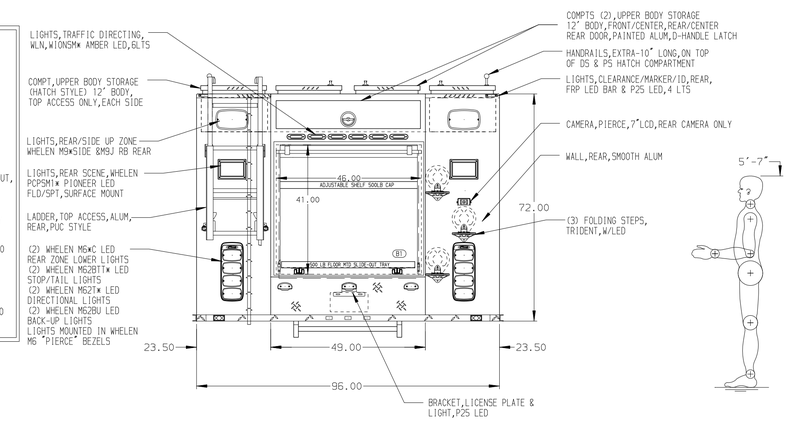

ALUMINUM BODY

NOTE
DIMENSIONS SHOWN ARE APPROXIMATE AND ARE SUBJECT TO MINOR DEVIATIONS AS MAY OCCUR OR BE NECESSARY IN CONSTRUCTION.
MINOR DETAILS NOT SHOWN.

REV.	DATE	BY	CHK'D
3	10MAY23	RHU	NAS
2	12APR23	RHU	NAS
1	27JAN23	JLA	AJA

CHASSIS DATA
CHASSIS FORD
MODEL F-550 4X4

Pierce MANUFACTURING INC.
BRADENTON, FLORIDA

TITLE	12' RESCUE,NON-WALK-IN –	JOB NO. 37751	DATE 04JAN23
FOR	BLOUNT COUNTY SHERIFFS OFFICE MARYVILLE, TENNESSEE	SCALE 1:24	DRAWN BY JLA
DRWG. NO.	37751AD	CHK'D BY AJA 06JAN23	SHEET NO. 1 OF 1
			SHEET SIZE D

View File Created 11-MAY-2023 14:15:15