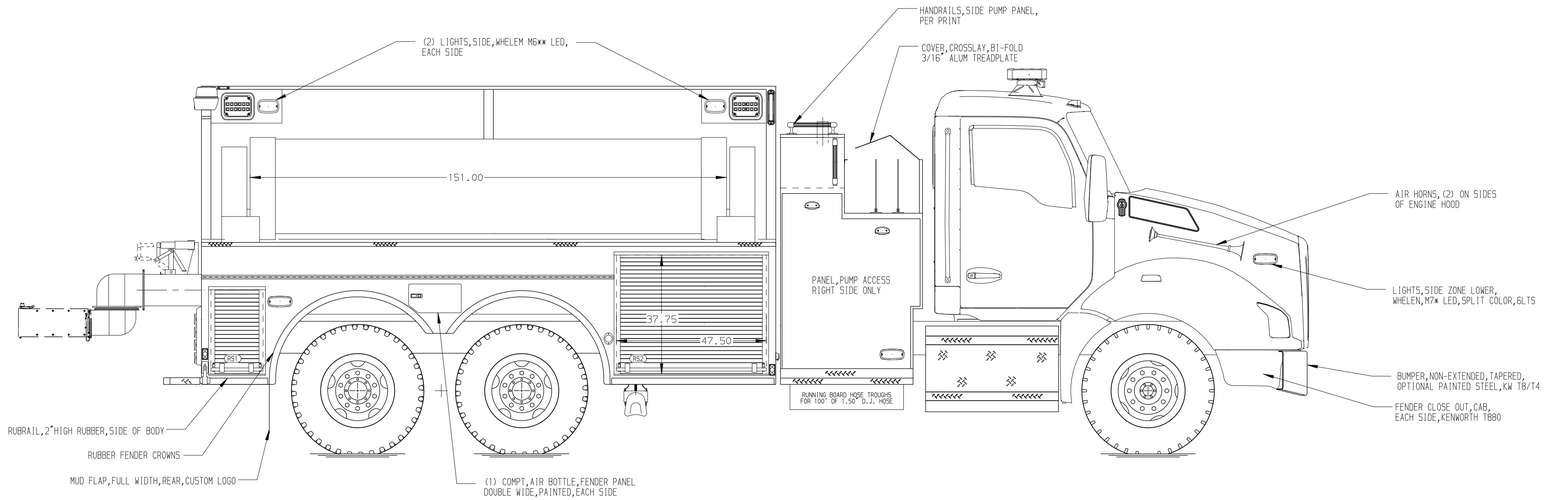

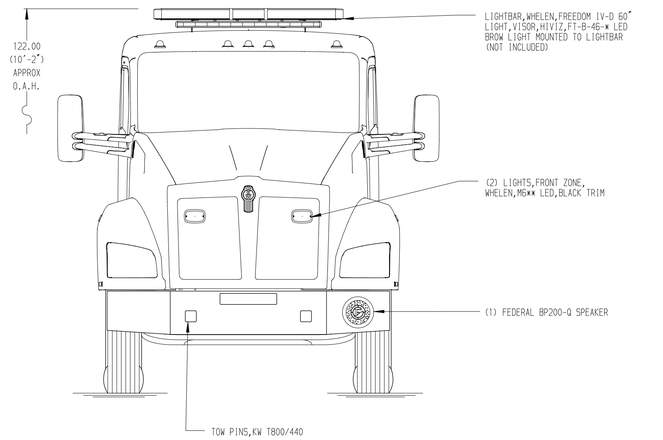

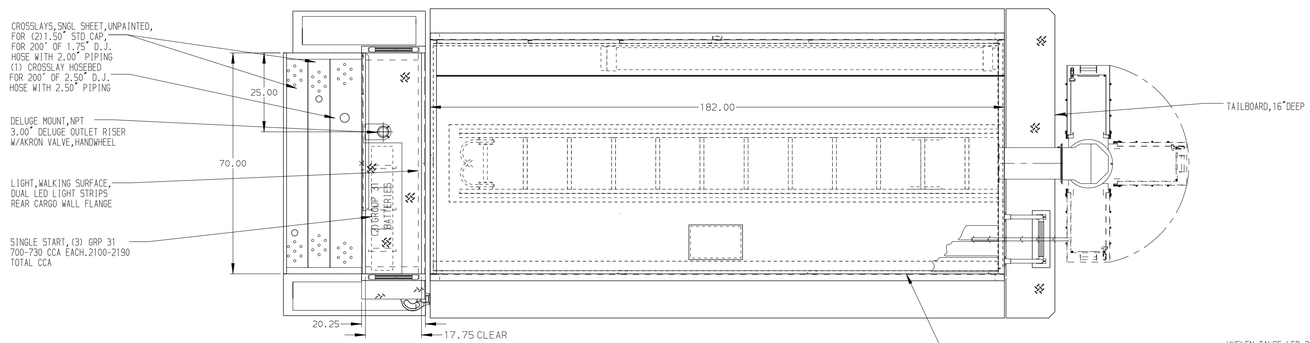

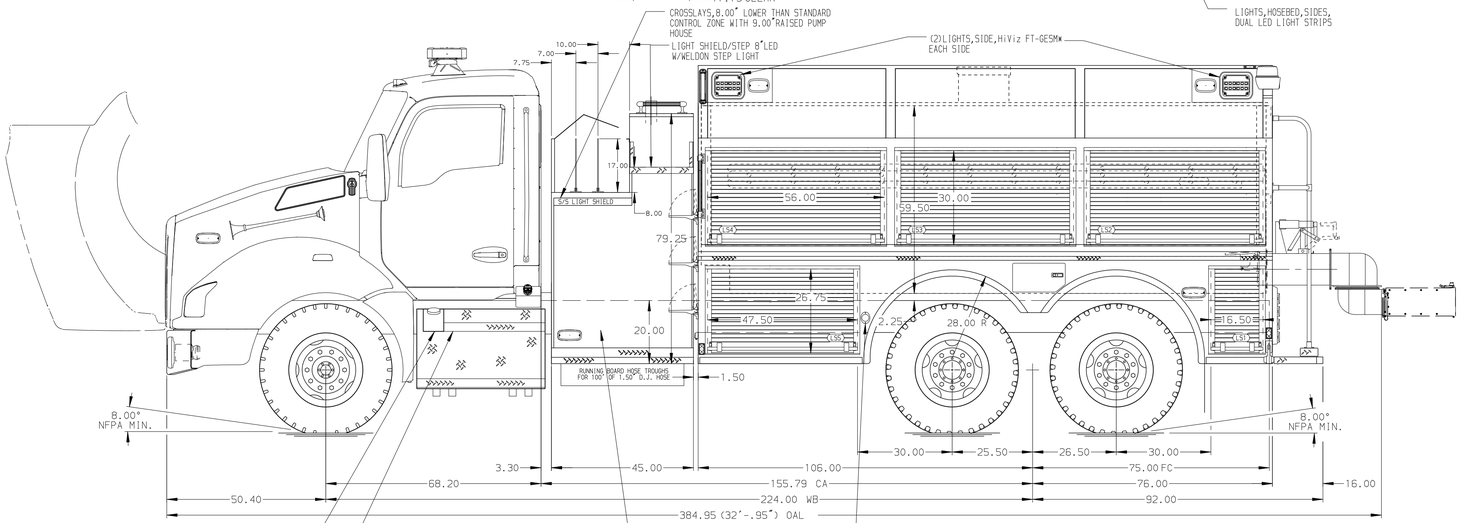

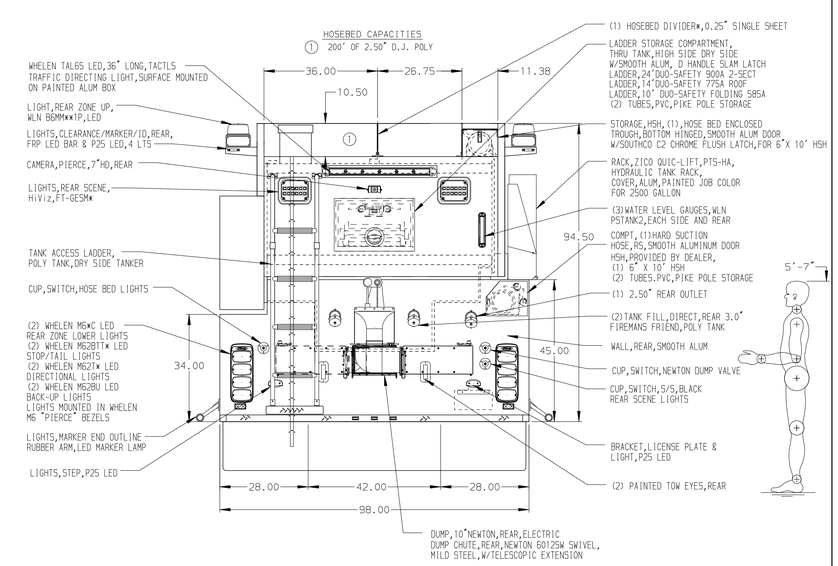

ALUMINUM BODY

NOTE

DIMENSIONS SHOWN ARE APPROXIMATE AND ARE SUBJECT TO MINOR DEVIATIONS AS MAY OCCUR OR BE NECESSARY IN CONSTRUCTION.
MINOR DETAILS NOT SHOWN.

REV	DATE	BY	CH
5	11MAY23	RHU	NAS
4	20APR23	JLA	NAS
3	27JAN23	JLA	NAS
2	07JAN23	JLA	NAS
1	31OCT22	RHU	RWI

CHASSIS DATA
MAKE: KENWORTH
MODEL: T880

Pierce MANUFACTURING INC.
BRADENTON, FLORIDA

TITLE: 1500-D-2200 POLY,182"HIGH SIDE DRYSIDE BODY 45"SIDE CONTROL,(2)1.5"(1)2.5" CROSSLAYS,3" DELUGE
FOR: MT.HOPE-FUNKS GROVE FIRE PROTECTION DIST. HAMILTON ST.MCLEAN,IL
DWG NO.: 37758AD

JOB NO.: 37758
SCALE: 1:24
DATE
DRAWN BY: RHU 31AUG22
CHECKED BY: RWI 01SEP22
SHEET SIZE: D
SHEET NO.: 1 OF 1

View File Created 11-MAY-2023 13:01:55