RIGHT SIDE COMPARTMENTS
CONTAIN THE FOLLOWING:

COMPARTMENT RS1 CONTAINS:
- (1) STD DEPTH ADJ SLIDE OUT TRAY
- (1) STD DEPTH ADJ SLIDE OUT/TILT TRAY
- (1) FLOOR MOUNTED TRAY
-
-
-

COMPARTMENT RS2 CONTAINS:
- (1) DOUBLE SWING OUT TOOL GRIDS
-
-
-

COMPARTMENT RS3 CONTAINS:
- PEGBOARD ON REAR WALL OF COMPARTMENT
- (1) RACK FOR 4 AIR BAGS
- (2) STD DEPTH ADJ SLIDE OUT TRAYS
- (1) FLOOR MOUNTED TRAY

COMPARTMENT RS4 CONTAINS:
- (1) CAB LIFT CONTROLLER
- (1) SINGLE DRAWER C-TECH CABINET
- (1) HORIZONTAL FLOOR EXTENSION
- (1) VERTICAL COMPARTMENT DIVIDER
- (1) RACK FOR 4 SHEETS OF PLYWOOD (90˚L)
- (1) RACK FOR 2 FIN FORM BOARDS (90˚L)
- (1) 2-WAY FLOOR MOUNTED SLIDE OUT TRAY
-
-

COMPARTMENT RS5 CONTAINS:
- (1) RACK FOR 4 PADDLES
- (1) RACK FOR STOKES BASKET
- (2) BACKBOARD RACKS
- (1) 2-WAY ON-SCENE SLIDE OUT TRAY WITH TOOLBOARD
-
-
-

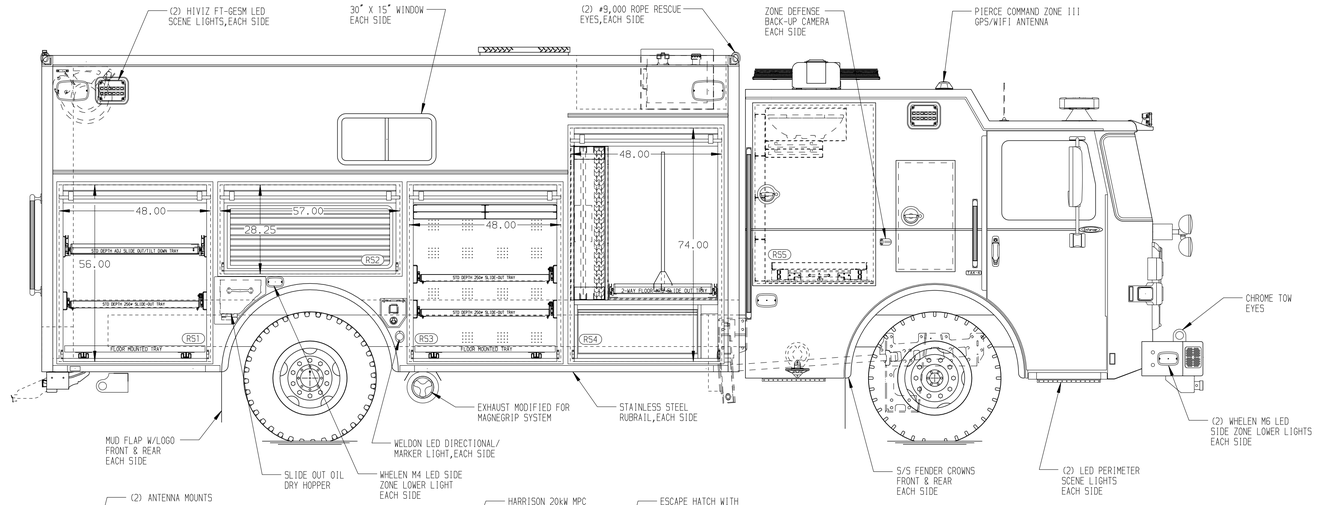

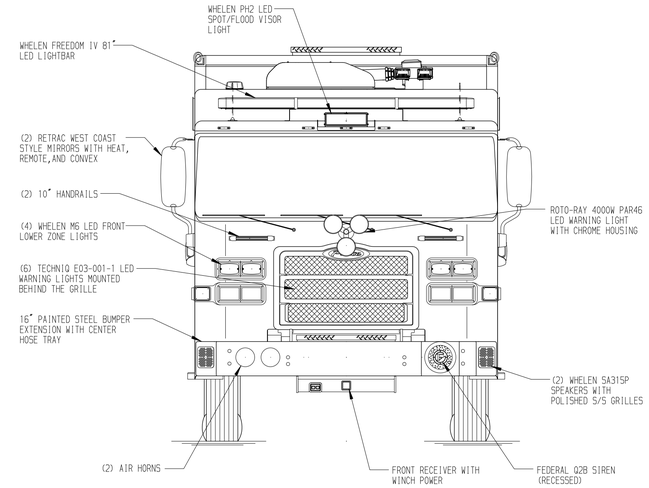

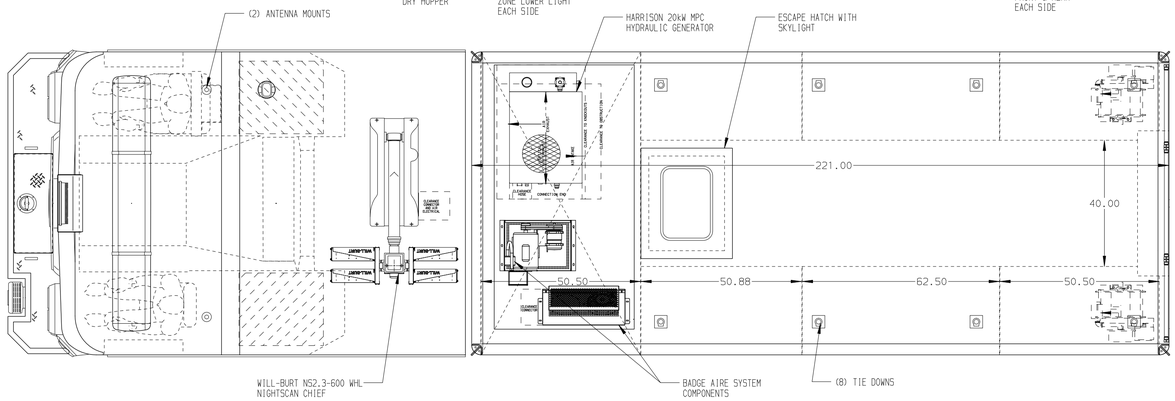

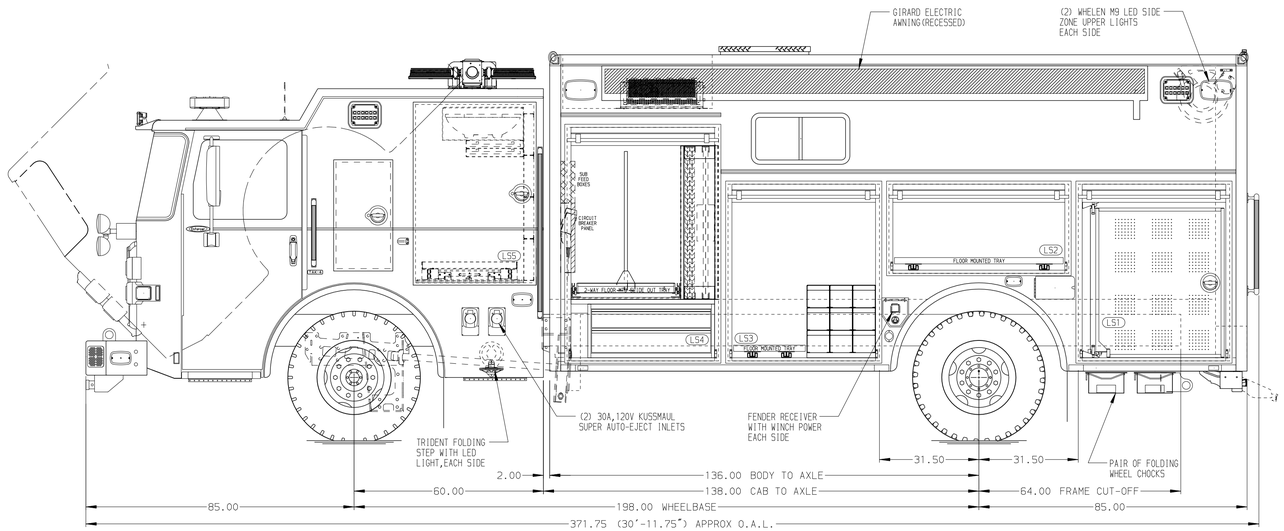

LEFT SIDE COMPARTMENTS
CONTAIN THE FOLLOWING:

COMPARTMENT LS1 CONTAINS:
- (1) SWING OUT TOOLBOARD
-
-
-

COMPARTMENT LS2 CONTAINS:
- (1) FLOOR MOUNTED TRAY
-
-
-

COMPARTMENT LS3 CONTAINS:
- (1) RACK FOR 9 SCBA BOTTLES
- (1) FLOOR MOUNTED TRAY
-
-

COMPARTMENT LS4 CONTAINS:
- (2) PQ2180 CHARGER/CONVERTERS
- (1) CIRCUIT BREAKER PANEL
- (2) SUB FEED BOXES
- (1) 2-DRAWER C-TECH CABINET
- (1) HORIZONTAL FLOOR EXTENSION
- (1) VERTICAL COMPARTMENT DIVIDER
- (1) RACK FOR 4 SHEETS OF PLYWOOD (90˚L)
- (1) RACK FOR 2 FIN FORM BOARDS (90˚L)
- (1) 2-WAY FLOOR MOUNTED SLIDE OUT TRAY WITH TOOLBOARD
- (1) NIGHT SCAN CONTROLLER

COMPARTMENT LS5 CONTAINS:
- (1) RACK FOR 4 PADDLES
- (1) RACK FOR STOKES BASKET
- (2) BACKBOARD RACKS
- (1) 2-WAY ON-SCENE SLIDE OUT TRAY
-
-

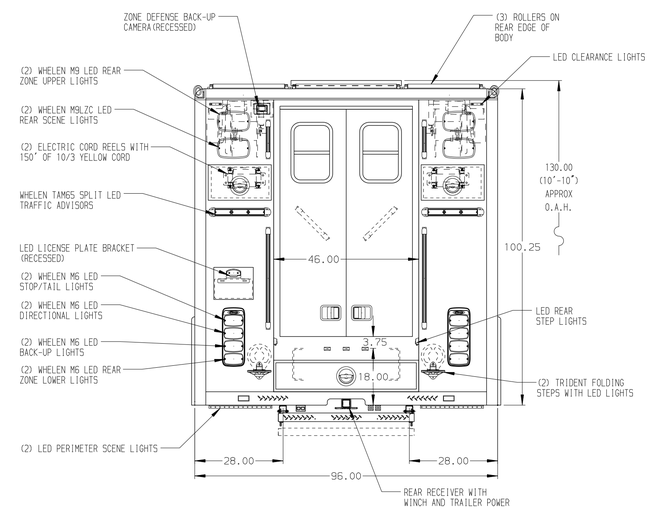

NOTE

DIMENSIONS SHOWN ARE APPROXIMATE AND ARE SUBJECT TO MINOR DEVIATIONS AS MAY OCCUR OR BE NECESSARY IN CONSTRUCTION.
MINOR DETAILS NOT SHOWN.

NOTES:
1. ONSPOT AUTOMATIC TIRE CHAINS
2. AIR INLET WITH DISCONNECT COUPLING LOCATED IN THE DRIVER'S SIDE STEP WELL OF CAB
3. POLISHED S/S SCUFFPLATES ON CAB AND CREW CAB DOORS
4. FLOOR IN CAB TO BE PADDED RUBBER
5. DAVID CLARK INTERCOM SYSTEM
6. PIERCE LED LIGHTS IN ALL BODY COMPARTMENTS

SIDE ROLL AND FRONTAL IMPACT PROTECTION

REV	DATE	BY	CH
▽	-	-	-

CUSTOMER APPROVAL
APPROVED BY:
DATE:

CHASSIS DATA
MAKE: PIERCE
MODEL: EN6010

Pierce MANUFACTURING INC.

TITLE: HEAVY DUTY RESCUE WALKIN
FOR: PIGEON FORGE FIRE DEPARTMENT BID #1185
BRADLEY JOHNSON

DWG NO. 37774AD-SH1

JOB NO.	37774
SCALE	1:24
DATE	22JUN22
DRAWN BY	DHE
CHECKED BY	CDK
DATE	23JUN22
SHEET SIZE	D
SHEET NO.	1 OF 1

View File Created 23-JUN-2022 09:39:16