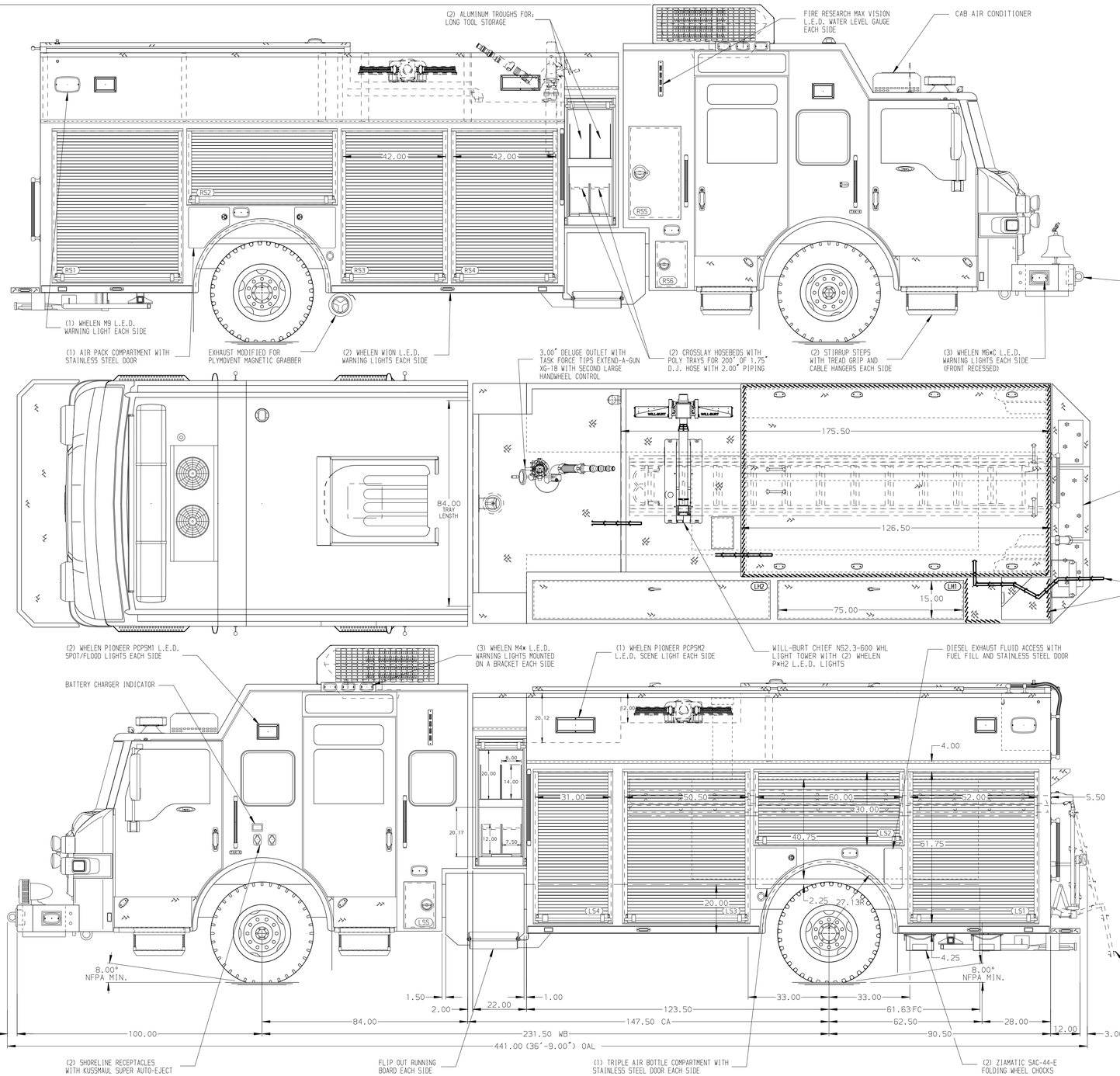

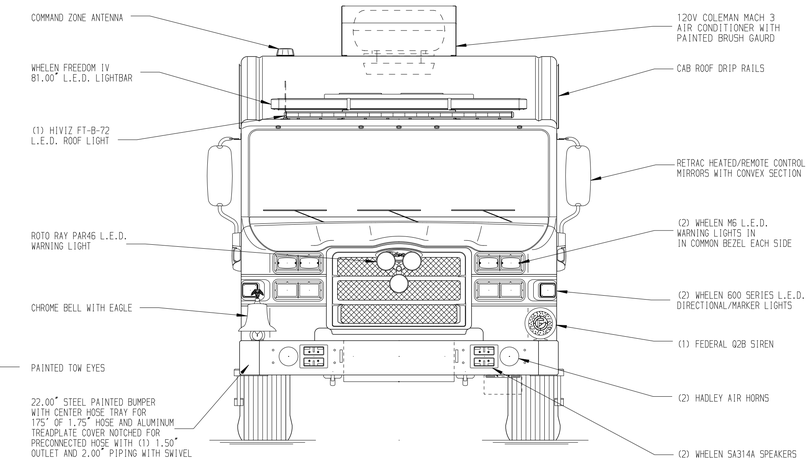

HOSEBED CAPACITIES

1 - 400' OF 2.50" D.J. POLY HOSE (BELOW)
100' OF 1.75" D.J. POLY HOSE (ABOVE)
2 - 1000' OF 5.00" D.J. POLY HOSE
3 - 400' OF 2.50" D.J. POLY HOSE
4 - 200' OF 2.50" D.J. POLY HOSE

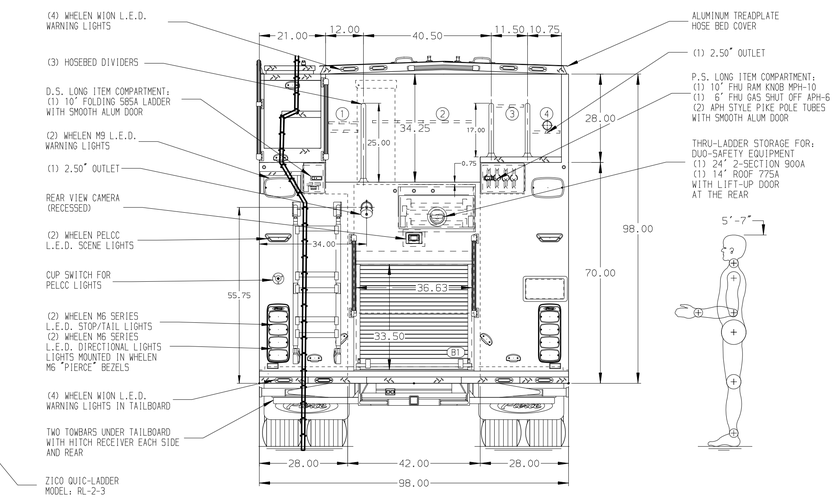

ALUMINUM BODY

SIDE ROLL AND FRONTAL IMPACT PROTECTION

NOTE

DIMENSIONS SHOWN ARE APPROXIMATE AND ARE SUBJECT TO MINOR DEVIATIONS AS MAY OCCUR OR BE NECESSARY IN CONSTRUCTION.
MINOR DETAILS NOT SHOWN.

1. BATTERY CHARGER LOCATED BEHIND DRIVER'S SEAT
2. AIR INLET/OUTLET WITH DISCONNECT FITTING LOCATED PER SHOP ORDER

REV	DATE	BY	CH
▽	-	-	-

CUSTOMER APPROVAL
APPROVED BY:
DATE:

Pierce MANUFACTURING INC.

CHASSIS DATA	
MAKE	PIERCE
MODEL	IMPEL FR
TITLE	1500-D-500P, 500 GAL WATER TANK, 214" FH/FD PUC BODY LADDER TUNNEL, (2) CROSSLAYS, DELUGE, LIGHT TOWER
FOR	LEWISVILLE FIRE DEPARTMENT LEWISVILLE, TEXAS
DWG NO.	37802AD-SH1

JOB NO.	37802
SCALE	1:24
DATE	
DRAWN BY	JJB 070CT22
CHECKED BY	WKL 070CT22
SHEET SIZE	D
SHEET NO.	1 OF 2

View File Created 10-OCT-2022 06:59:49