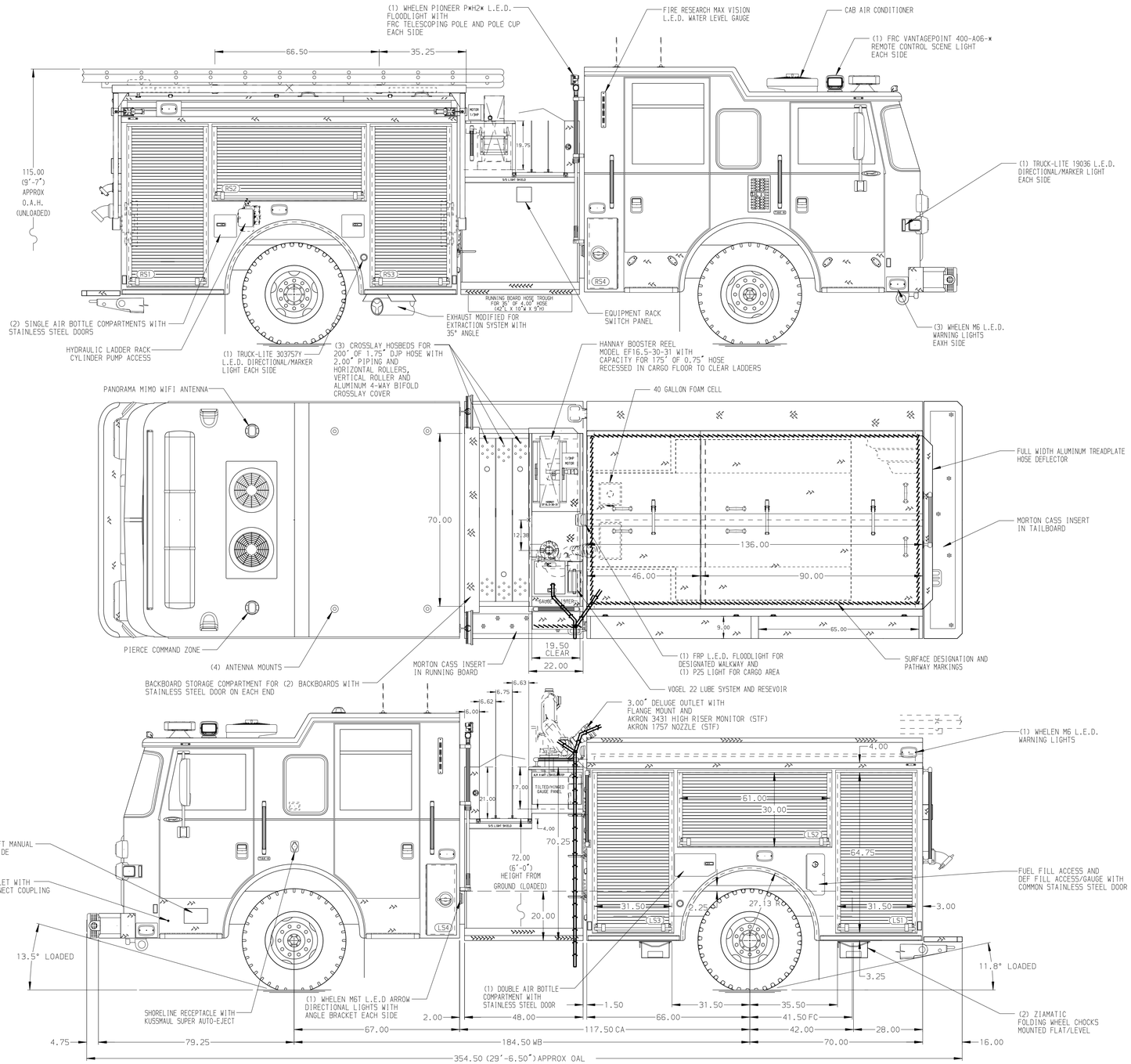

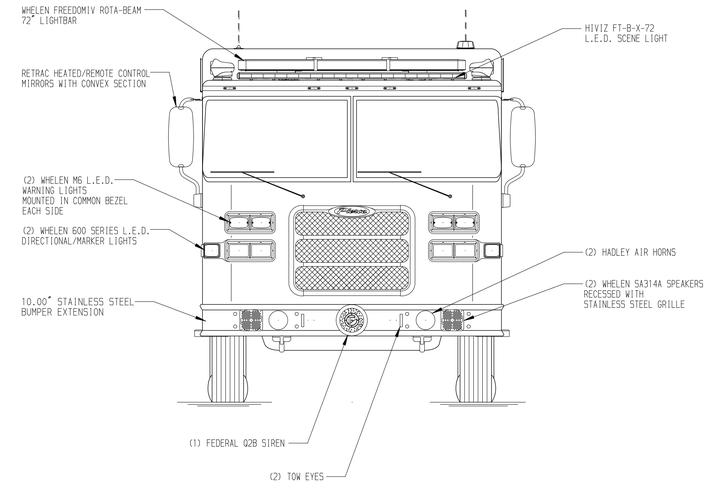

HOSEBED CAPACITIES

1 - 900' OF 4.00" DJP HOSE
2 - 750' OF 2.50" DJP HOSE
3 - 200' OF 2.50" DJP HOSE

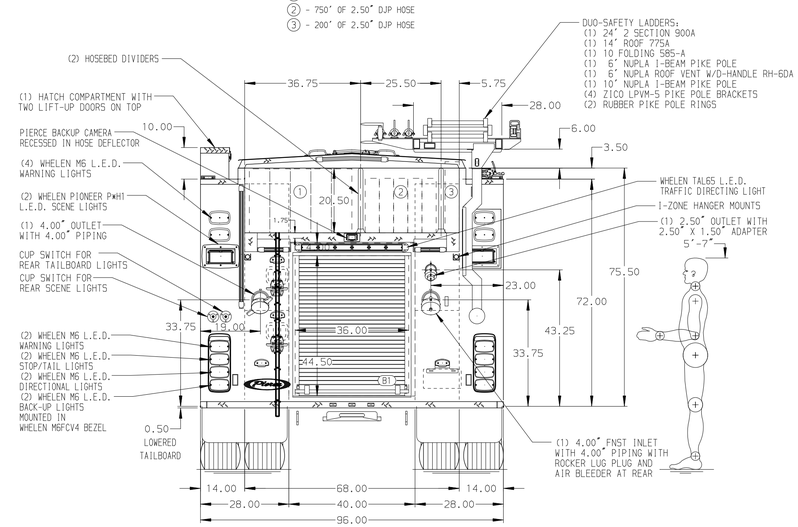

GALVANNEAL BODY

MAXIMUM O.A.L. 372.00"

MAXIMUM O.A.H. 114.00"

CUSTOMER APPROVAL

APPROVED BY: _____

DATE: _____

Pierce MANUFACTURING INC.

JOB NO.	37837 (01-05)
SCALE	1:24
DATE	
DRAWN BY	SAM
	12AUG22
CHECKED BY	BSE
SHEET SIZE	D
SHEET NO.	1 OF 2

TITLE: 1500-D-540P, 500G WATER W/40G FOAM, 136" BODY
(3) CROSSLAYS, HYD LADDER RACK, DELUGE, BOOSTER REEL

FOR: SAN DIEGO FIRE DEPARTMENT
SAN DIEGO, CALIFORNIA

CHASSIS DATA
MAKE: PIERCE
MODEL: ARROW XT

DWG NO. 37837AD-SH1

REV	DATE	BY	CH
-	-	-	-

NOTE

DIMENSIONS SHOWN ARE APPROXIMATE AND ARE SUBJECT TO MINOR DEVIATIONS AS MAY OCCUR OR BE NECESSARY IN CONSTRUCTION.
MINOR DETAILS NOT SHOWN.

1. STAINLESS STEEL SCUFFPLATE ON EACH CAB DOOR JAMB
2. AIR INLET WITH DISCONNECT COUPLING IN THE DRIVER SIDE STEPWELL
3. ONE AIR OUTLET WITH SHUT OFF VALVE LOCATED ON EACH SIDE PUMP PANEL
4. BATTERY CHARGER/COMPRESSOR LOCATED PER ORDER
5. BATTERY CHARGE INDICATOR DISPLAY THROUGH WINDOW BEHIND DRIVER SEAT
6. PERIMETER SCENE LIGHTS LOCATED PER ORDER
7. DUAL L.E.D. LIGHT STRIPS IN HOSE BED COVER PER ORDER
8. TRUCK-LITES IN HATCH COMPARTMENT PER ORDER
9. THREE P25 CROSSLAY LIGHTS PER ORDER
10. FOAMPRO 2002 SINGLE AGENT FOAM SYSTEM
11. MIC & SPEAKER COMPARTMENT LOCATED ON DS PUMP PANEL

View File Created 12-AUG-2022 10:46:58