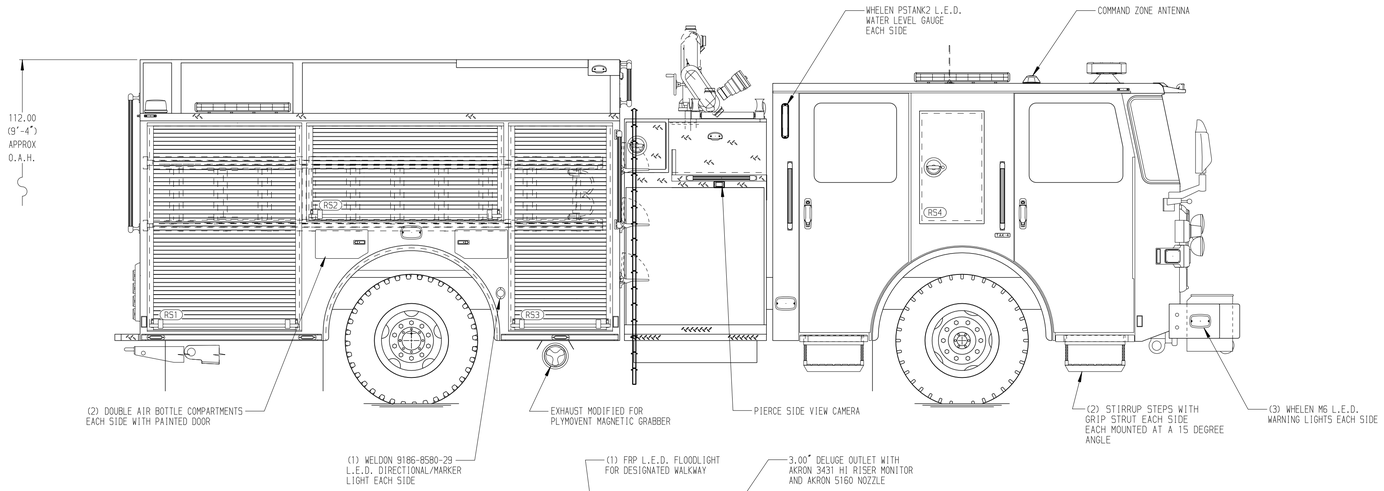

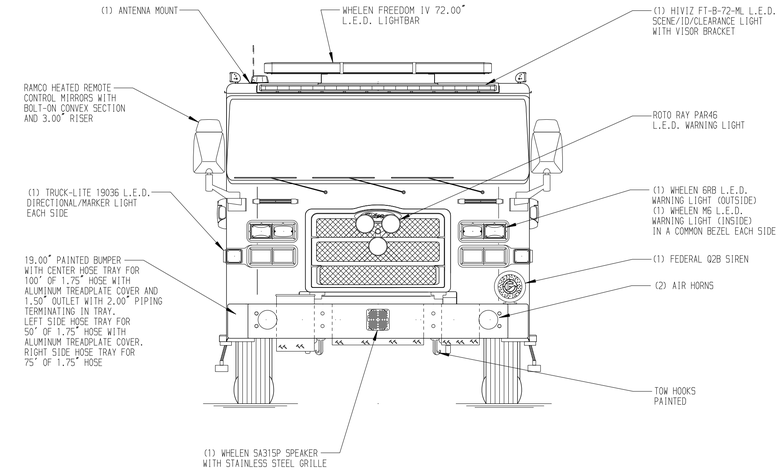

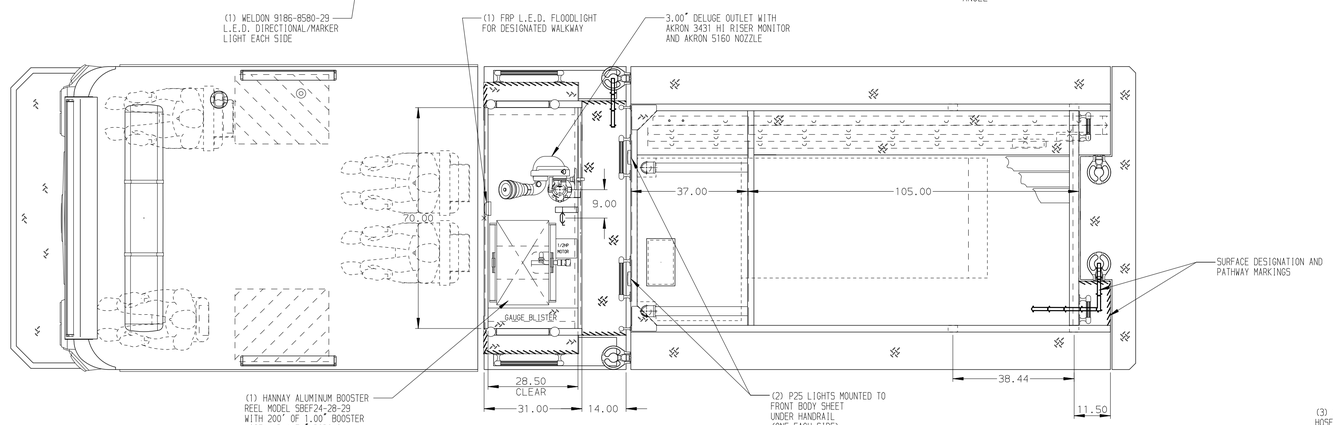

HOSEBED CAPACITIES

1. 200' OF 1.75" HOSE IN A REMOVABLE TRAY
2. 250' OF 2.50" HOSE
3. 500' OF 2.50" HOSE = 9" CLEAR OPENING
4. 1000' OF 5.00" HOSE
5. 200' OF 1.75" HOSE IN A REMOVABLE TRAY
6. 250' OF 2.50" HOSE

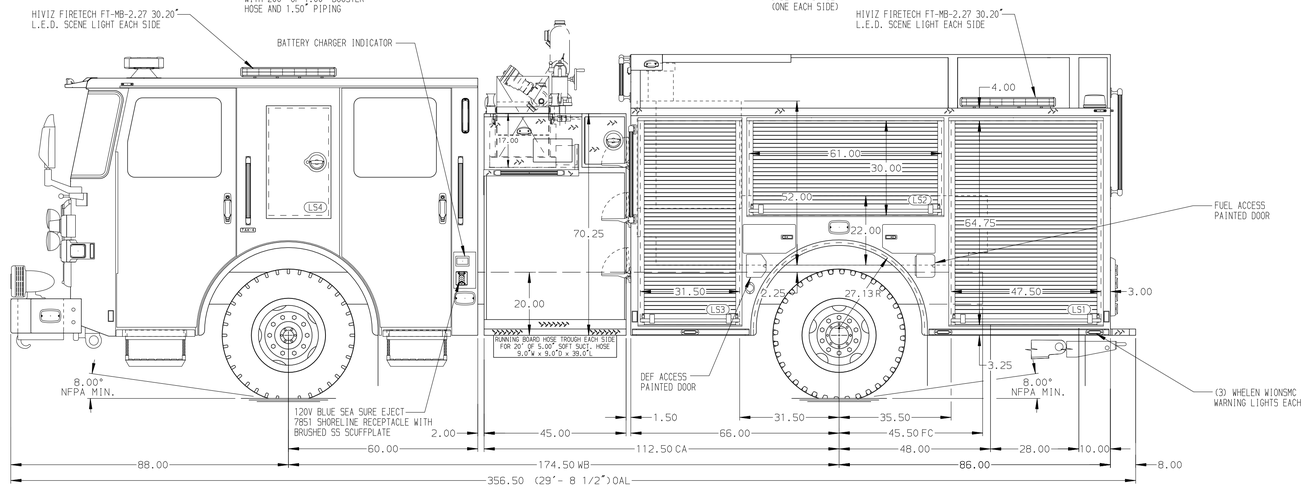

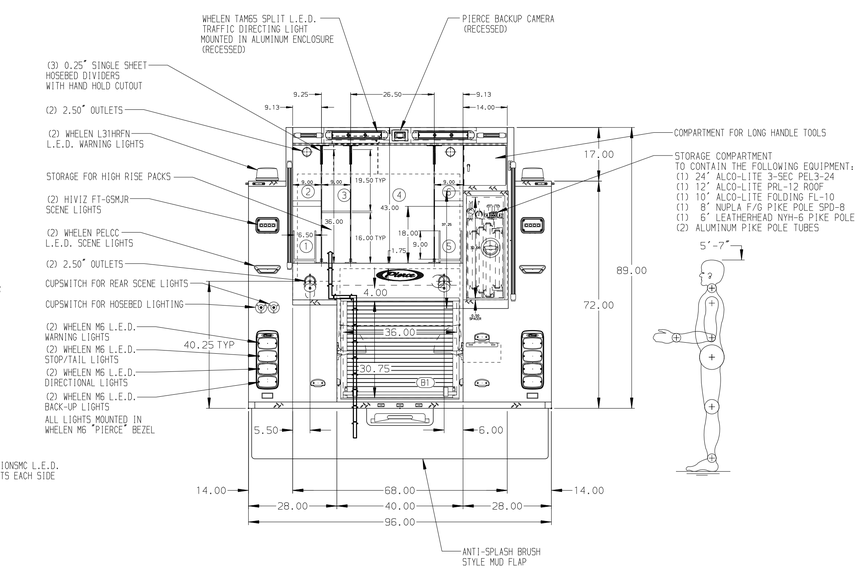

ALUMINUM BODY | MAXIMUM O.A.L. 360.00" | MAXIMUM O.A.H. 113.00" | SIDE ROLL AND FRONTAL IMPACT PROTECTION

NOTE

DIMENSIONS SHOWN ARE APPROXIMATE AND ARE SUBJECT TO MINOR DEVIATIONS AS MAY OCCUR OR BE NECESSARY IN CONSTRUCTION.
MINOR DETAILS NOT SHOWN.

1. ONSPOT AUTOMATIC TIRE CHAINS TO BE PROVIDED AT REAR
2. AIR OUTLET WITH SHUT-OFF VALVE LOCATED AT LEFT SIDE PUMP PANEL
3. DUAL L.E.D. LIGHT STRIPS LOCATED IN HOSE BED
4. DRIP PAN GUARD FOR ROLL-UP DOOR LOCATED ON ALL COMPARTMENT DOORS
5. AIR INLET WITH DISCONNECT COUPLING LOCATED IN DRIVER'S STEP WELL
6. WHEEL CHOCKS AND MOUNTING BRACKETS PROVIDED BY CUSTOMER
7. TFT BLITZFIRE MONITOR XXC-52 - MOUNTING LOCATION TBD

REV	DATE	BY	CH
V	10AUG23	LST	SMA
B	06JUN23	LST	SMA
V	27MAR23	LST	SMA

CHASSIS DATA
MAKE: PIERCE
MODEL: ENFORCER

Pierce MANUFACTURING INC.

TITLE: 2000-500 WATER, 152" FH FDLER BODY, SIDE CONTROL LADDERS BETWEEN TANK & SIDE SHEET, BOOSTER REEL
FOR: KNOXVILLE FIRE DEPARTMENT, KNOXVILLE, TENNESSEE
DWG NO.: 37845AD-SH1

JOB NO.	37845
SCALE	1:24
DATE	
DRAWN BY	LST 03FEB23
CHECKED BY	SMA 23MAR23
SHEET SIZE	D
SHEET NO.	1 OF 2

View File Created 11-AUG-2023 11:06:20