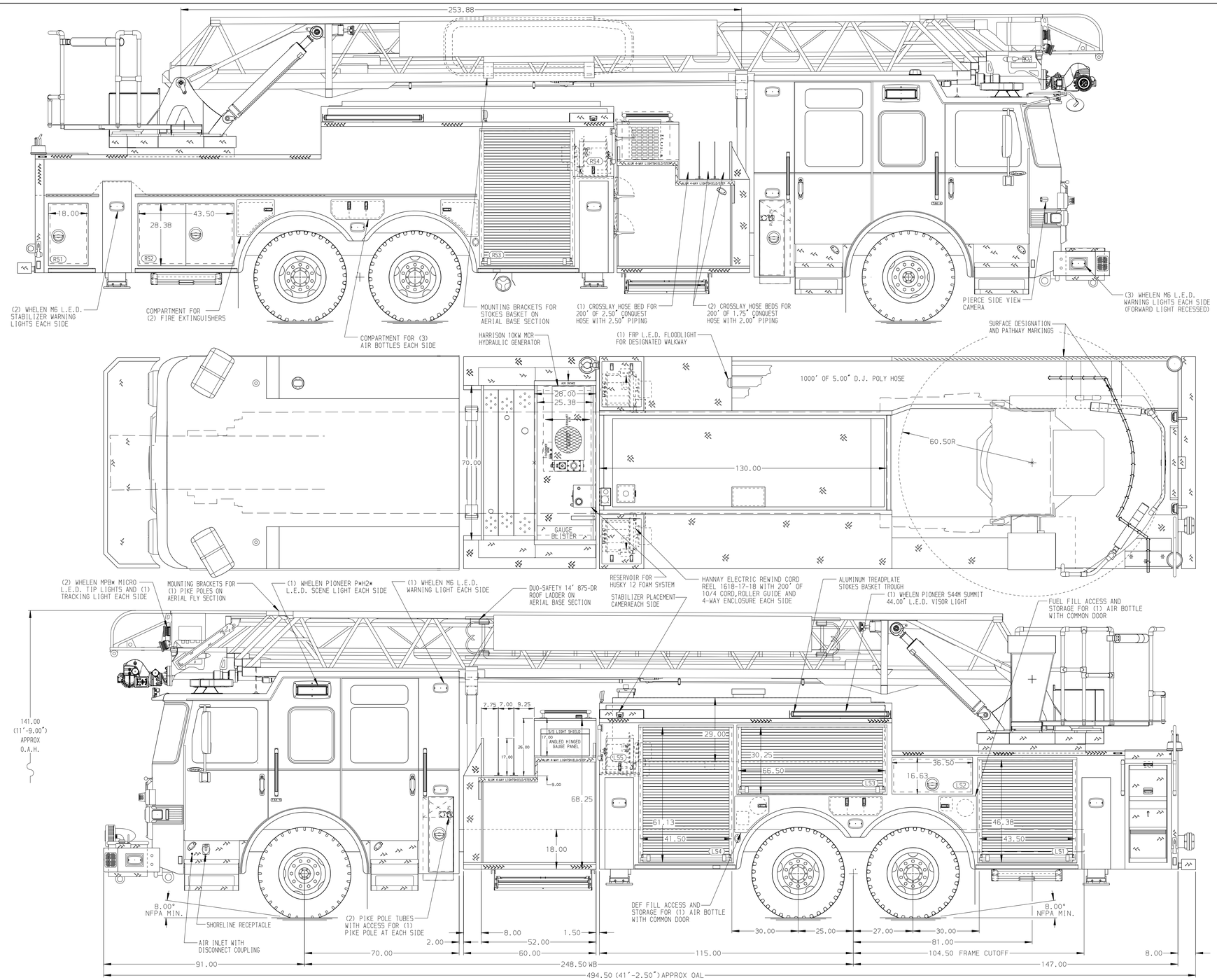

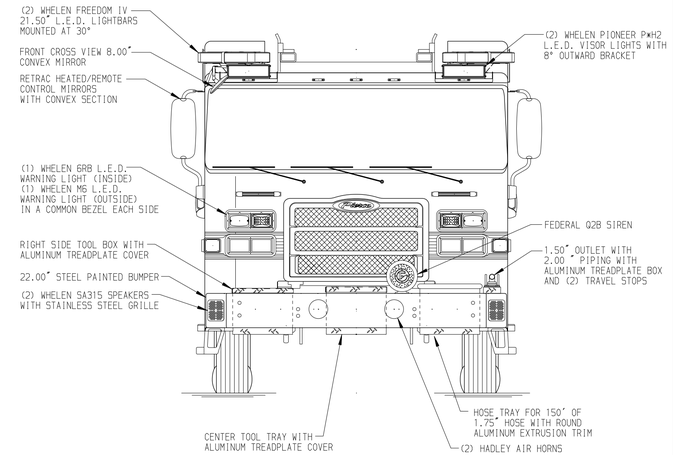

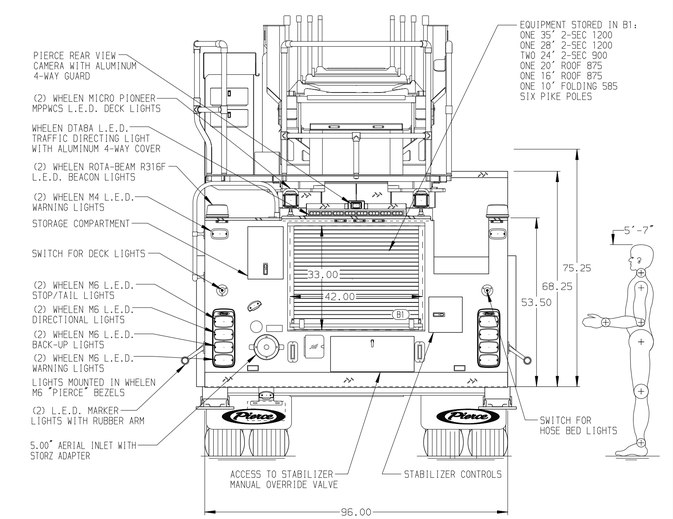

ALUMINUM BODY

MAXIMUM O.A.H. 141.00"

SIDE ROLL AND FRONTAL IMPACT PROTECTION

NOTE

DIMENSIONS SHOWN ARE APPROXIMATE AND ARE SUBJECT TO MINOR DEVIATIONS AS MAY OCCUR OR BE NECESSARY IN CONSTRUCTION.
MINOR DETAILS NOT SHOWN.

1. BATTERY CHARGER LOCATED IN COMPARTMENT PER ORDER
2. BATTERY CHARGER INDICATOR LOCATED ON DRIVER'S SEAT RISER
3. STABILIZER COMPARTMENTS MODIFIED FOR 18" GROUND PENETRATION
4. THREE ADJUSTABLE FULL WIDTH/FULL DEPTH SHELVES IN COMPARTMENTS PER ORDER
5. TWO ADJUSTABLE TILTING SLIDE-OUT TRAYS IN COMPARTMENTS PER ORDER
6. THREE FLOOR MOUNTED SLIDE-OUT TRAYS IN COMPARTMENTS PER ORDER
7. TWO SLIDE-OUT TOOL BOARDS WITH PEGBOARD PATTERN IN COMPARTMENT PER ORDER
8. COMPARTMENT VENTILATION SYSTEM WITH TIMER
9. CIRCUIT BREAKER PANEL IN COMPARTMENT PER ORDER
10. TWO 120V DUPLEX RECEPTACLES LOCATED IN CAB AND FIVE IN BODY COMPARTMENTS PER ORDER
11. ALUMINUM PEGBOARD ON THE SIDE WALL OF COMPARTMENT PER ORDER
12. DC POWER TO AERIAL TIP
13. L.E.D. LIGHTING ON AERIAL LADDER SECTIONS
14. FIRE RESEARCH 3-WAY INTERCOM SYSTEM BETWEEN AERIAL TIP,PUMP PANEL AND TURNTABLE
15. LIFTING EYE ROPE RESCUE ATTACHMENT AT AERIAL TIP
16. AERIAL PEDESTAL RAISED 3.00"
17. TRIDENT FOLDING STEPS ON AERIAL DEVICE
18. 1500 GPM HIGH FLOW WATERWAY
19. 7.00" AERIAL LIMITED RETRACTION

REV	DATE	BY	CH
V	27SEP23	SHU	DTJ
V	12JUN23	SHU	DTJ
V	04MAY23	SHU	DTJ
V	20APR23	LWE	DTJ
V	08MAR23	SHU	BYO

CHASSIS DATA: MAKE PIERCE; MODEL ENFORCER

Pierce MANUFACTURING INC.

TITLE: 107' ASCENDANT AERIAL LADDER AND BODY ASSEMBLY
530 GALLON TANK,500 GAL WATER/30 GAL FOAM

FOR: PENFIELD FIRE DISTRICT
PENFIELD, NY

DWG NO. 37872AD

JOB NO.	37872
SCALE 1:24	DATE
DRAWN BY SHU	28FEB23
CHECKED BY BYO	02MAR23
SHEET SIZE D	SHEET NO. 1 OF 1

View File Created 29-SEP-2023 12:33:26