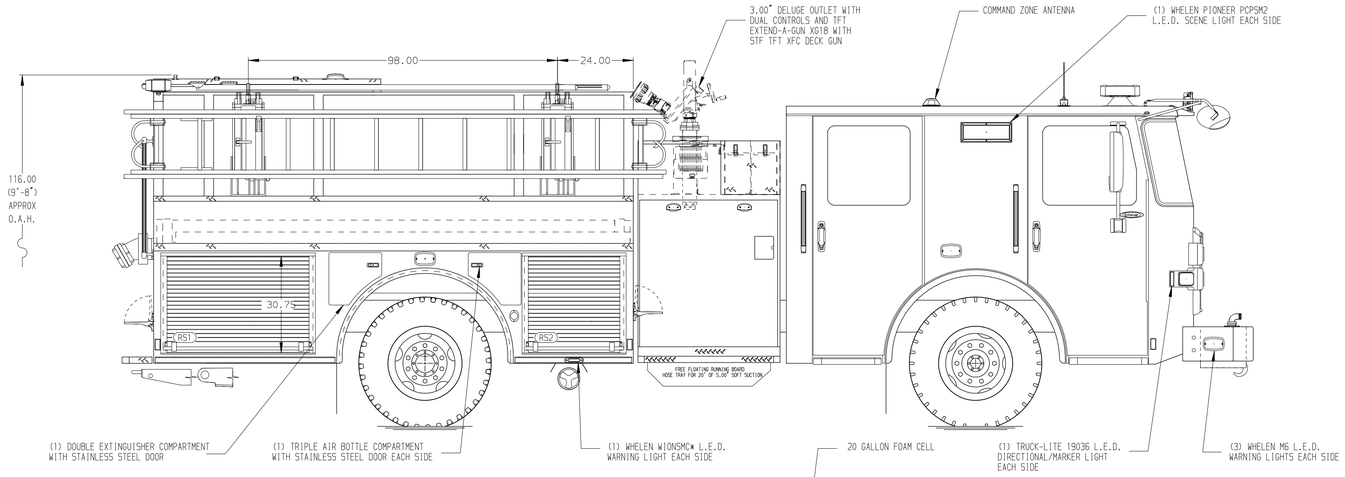

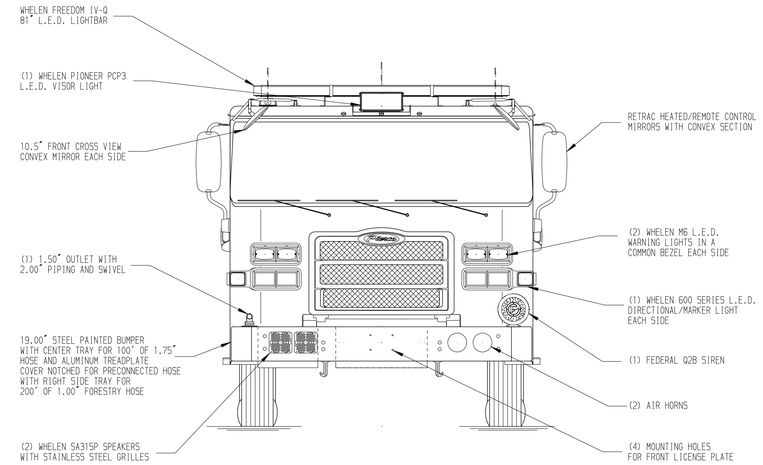

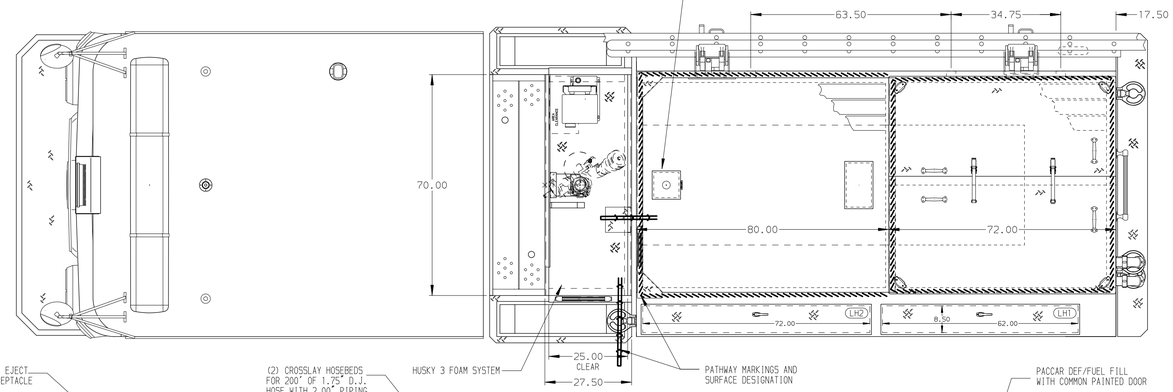

HOSEBED CAPACITIES

1 - 600' OF 3.00" NATIONAL N-DURA
2 - 400' OF 1.75" KEY COMBAT READY
3 - 300' OF 2.50" KEY TRU-ID
4 - 1000' OF 5.00" KEY PRO-FLOW

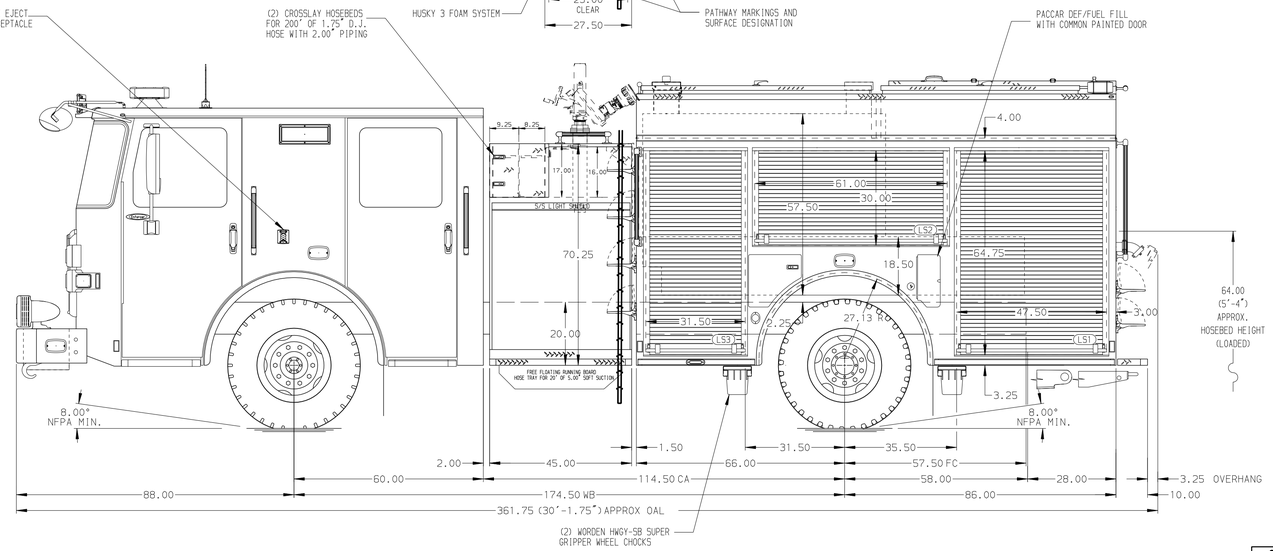

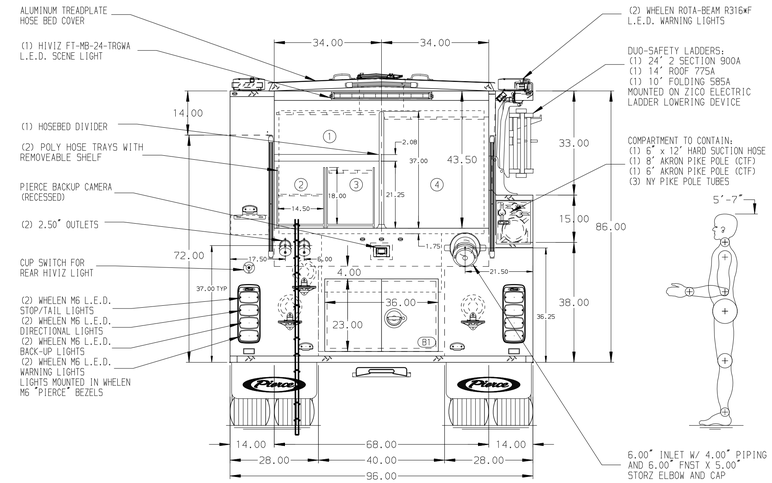

ALUMINUM BODY | MAXIMUM O.A.L. 360.00" | MAXIMUM O.A.H. 116.00" | SIDE ROLL AND FRONTAL IMPACT PROTECTION

CUSTOMER APPROVAL

APPROVED BY: _____

DATE: _____

Pierce MANUFACTURING INC.

NOTE

DIMENSIONS SHOWN ARE APPROXIMATE AND ARE SUBJECT TO MINOR DEVIATIONS AS MAY OCCUR OR BE NECESSARY IN CONSTRUCTION.
MINOR DETAILS NOT SHOWN.

1. BATTERY CHARGER LOCATED BEHIND DRIVER SEAT
2. 12V L.E.D. LIGHT STRIPS ON HOSE BED COVER
3. DRIP PAN GUARD FOR ROLL-UP DOOR LOCATED PER SHOP ORDER
4. THREE FULL WIDTH/DEPTH ADJUSTABLE SHELVES LOCATED PER SHOP ORDER
5. TWO FLOOR MOUNTED SLIDE-OUT TRAYS LOCATED PER SHOP ORDER
6. ONE VERTICAL PARTITION LOCATED PER SHOP ORDER
7. TWO ALUMINUM PEGBOARDS ON BACK WALL LOCATED PER SHOP ORDER
8. TWO 120V DUPLEX RECEPTACLES LOCATED PER SHOP ORDER
9. BATTERY CHARGER INDICATOR LOCATED PER SHOP ORDER

REV	DATE	BY	CH
7	-	-	-

CHASSIS DATA	
MAKE	PIERCE
MODEL	ENFORCER
TITLE	2000-D-1020P, 1000G WATER, 20G FOAM, 152" FDLER BODY ZICO LADDER RACK, (2) CROSSLAYS, HSH, DELUGE
FOR	CANYON LAKE F.D. - COMAL CO. ESD #3 CANYON LAKE, TEXAS
DWG NO.	37890AD

JOB NO.	37890
SCALE	1:24
DATE	
DRAWN BY	JJB
01DEC22	
CHECKED BY	WKL
02DEC22	
SHEET SIZE	D
SHEET NO.	1 OF 1

View File Created 01-DEC-2022 14:30:15