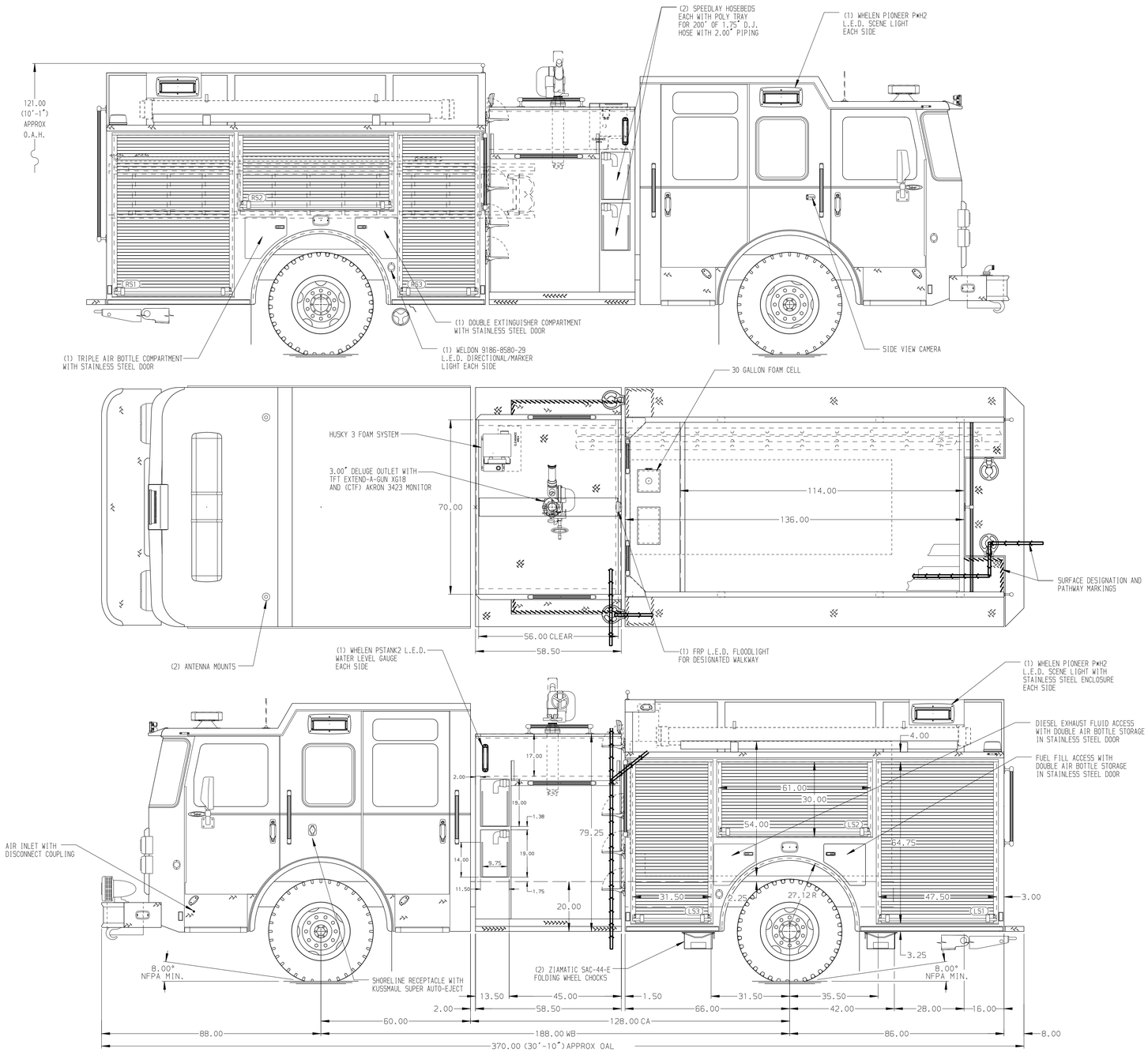

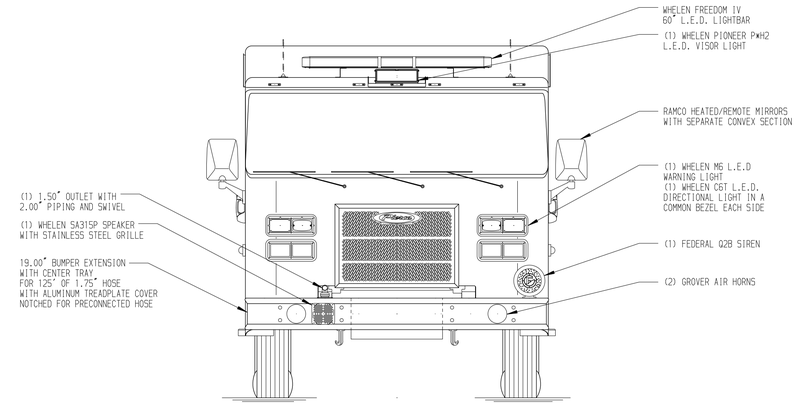

HOSEBED CAPACITIES

1. - 150' OF 2.50" D.J. POLY HOSE
2. - 200' OF 2.50" D.J. POLY HOSE
3. - 700' OF 5.00" D.J. POLY HOSE
4. - 500' OF 2.50" D.J. POLY HOSE

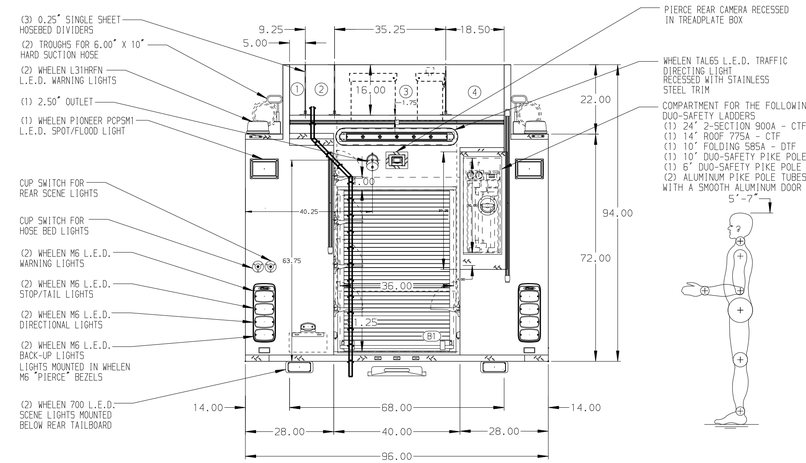

ALUMINUM BODY

SIDE ROLL AND FRONTAL IMPACT PROTECTION

NOTE

DIMENSIONS SHOWN ARE APPROXIMATE AND ARE SUBJECT TO MINOR DEVIATIONS AS MAY OCCUR OR BE NECESSARY IN CONSTRUCTION.
MINOR DETAILS NOT SHOWN.

CUSTOMER APPROVAL

APPROVED BY: _____

DATE: _____

REV	DATE	BY	CH
▽	-	-	-

CHASSIS DATA

MAKE: PIERCE

MODEL: SABER FR

Pierce MANUFACTURING INC.

TITLE: 1500-D-780P, 750G WATER W/ 30G FOAM, 152" BODY LADDERS BTWN TANK & SS, (2) SPEEDLAYS, DELUGE

FOR: ALAMOSA FIRE DEPARTMENT
ALAMOSA, COLORADO

DWG NO.: 37894AD

JOB NO.	SCALE	DRAWN BY	CHECKED BY	SHEET SIZE	SHEET NO.
37894	1:24	LME	CZA	D	1 OF 1

DATE: 07JUN22 09JUN22

View File Created 09-JUN-2022 13:53:32