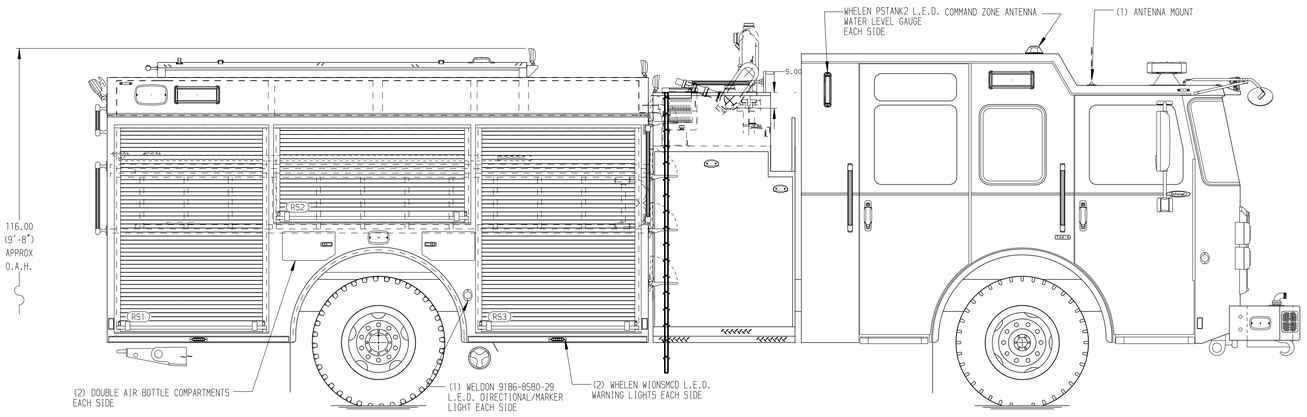

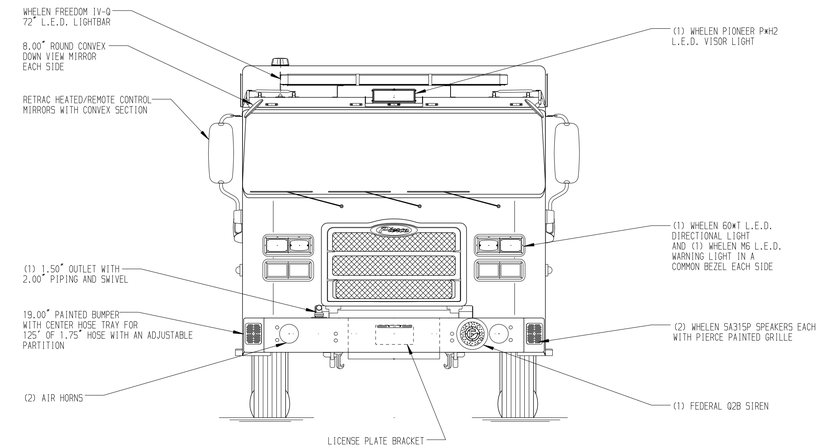

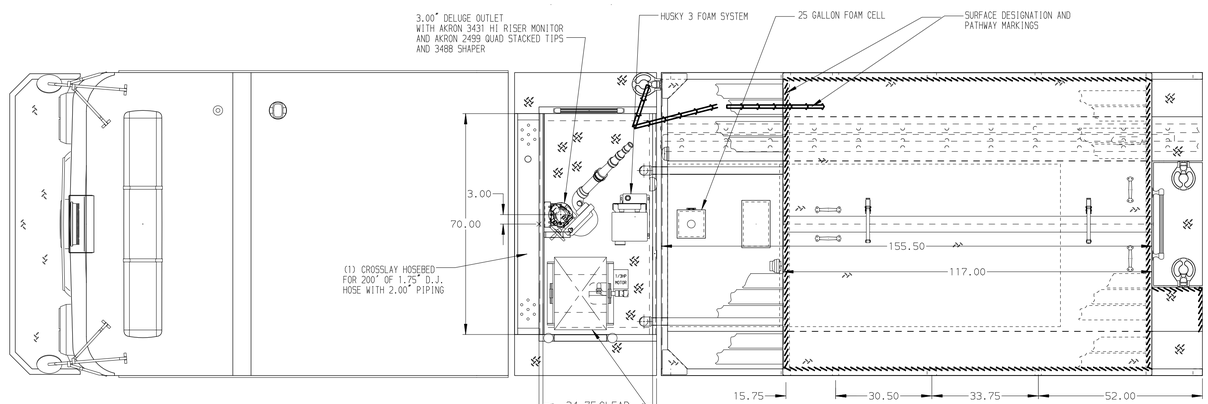

HOSEBED CAPACITIES

1. 200' OF 1.75" D.J. POLY HOSE
2. 800' OF 5.00" D.J. POLY HOSE
3. 400' OF 3.00" D.J. POLY HOSE
4. 200' OF 1.75" D.J. POLY HOSE

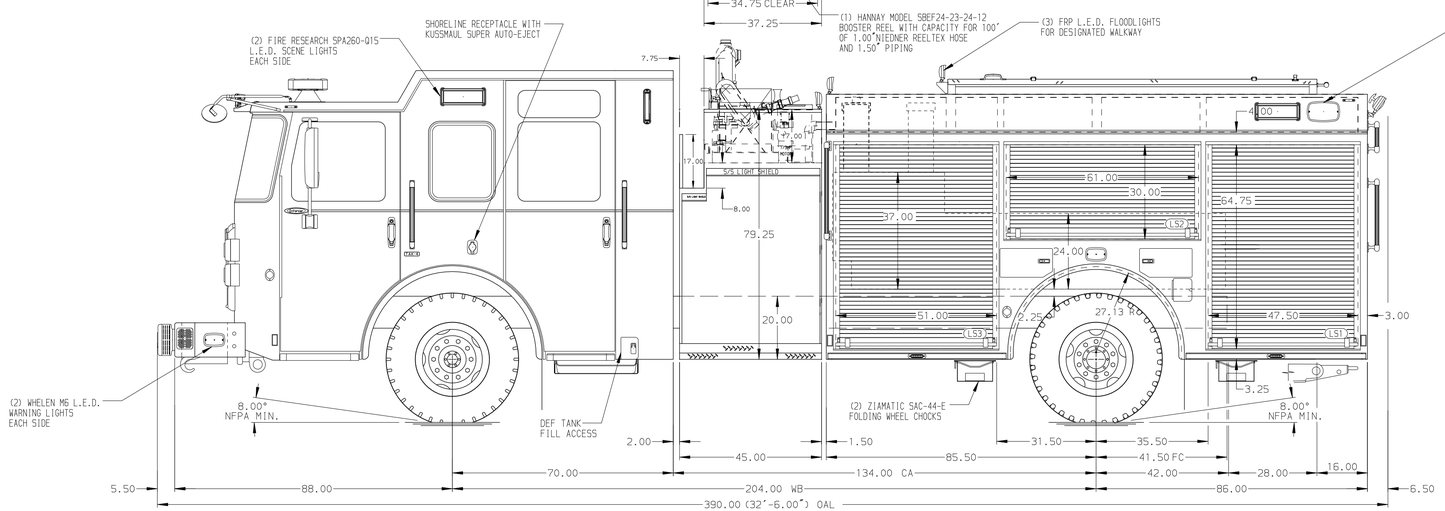

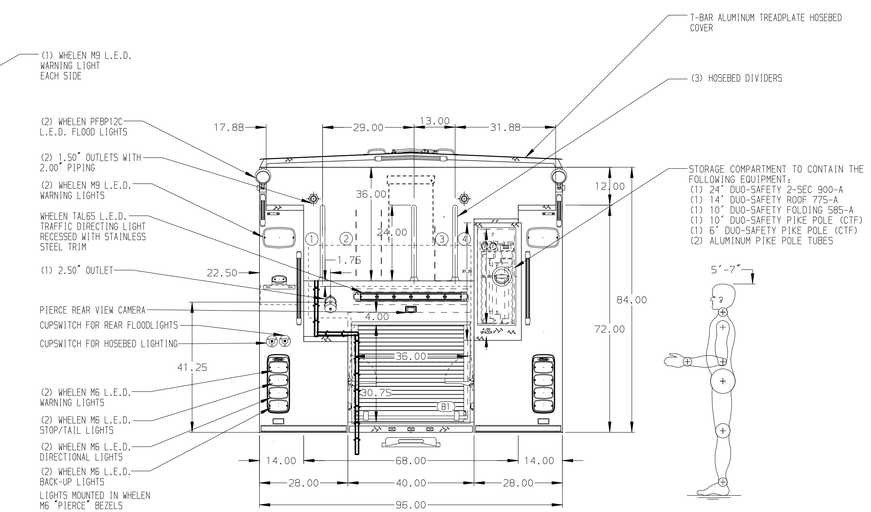

ALUMINUM BODY

SIDE ROLL AND FRONTAL IMPACT PROTECTION

CUSTOMER APPROVAL

APPROVED BY: _____

DATE: _____

Pierce MANUFACTURING INC.

NOTE

DIMENSIONS SHOWN ARE APPROXIMATE AND ARE SUBJECT TO MINOR DEVIATIONS AS MAY OCCUR OR BE NECESSARY IN CONSTRUCTION.
MINOR DETAILS NOT SHOWN.

1. AIR INLET WITH DISCONNECT COUPLING LOCATED PER SHOP ORDER
2. BATTERY CHARGER LOCATED PER SHOP ORDER
3. BATTERY CHARGER INDICATOR LOCATED PER SHOP ORDER
4. DUAL L.E.D. LIGHT STRIPS LOCATED IN HOSE BED
5. SEVEN DRIP PAN GUARDS FOR ROLL-UP DOORS LOCATED PER SHOP ORDER
6. EIGHT FULL WIDTH/DEPTH ADJUSTABLE SHELVES LOCATED PER SHOP ORDER
7. ONE ALUMINUM SWING-OUT TOOLBOARD LOCATED PER SHOP ORDER
8. THREE FLOOR MOUNTED SLIDE-OUT TRAYS LOCATED PER SHOP ORDER
9. TWO ALUMINUM PEGBOARDS MOUNTED ON THE BACK WALL LOCATED PER SHOP ORDER
10. FOUR 120V NEMA DUPLEX RECEPTACLES LOCATED PER SHOP ORDER

REV	DATE	BY	CH
▽	-	-	-

CHASSIS DATA	
MAKE	PIERCE
MODEL	ENFORCER
TITLE	2000-D-525P, 500 GAL OF WATER W/ 25 GAL FOAM CELL 171" FH FDLER,LDRS. BTWN. TANK & S. SHEET, (1) X-LAY
FOR	LEANDER FIRE DEPARTMENT LEANDER, TEXAS
DWG NO.	37916AD
JOB NO.	37916
SCALE	1:24
DATE	
DRAWN BY	LST 05DEC22
CHECKED BY	WKL 15DEC22
SHEET SIZE	D
SHEET NO.	1 OF 1

View File Created 15-DEC-2022 12:59:42