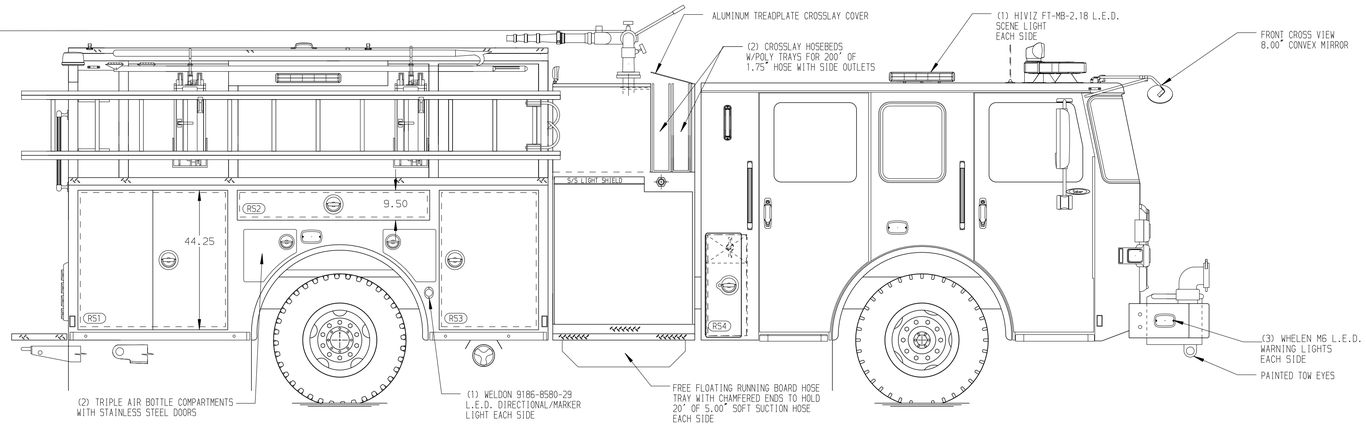

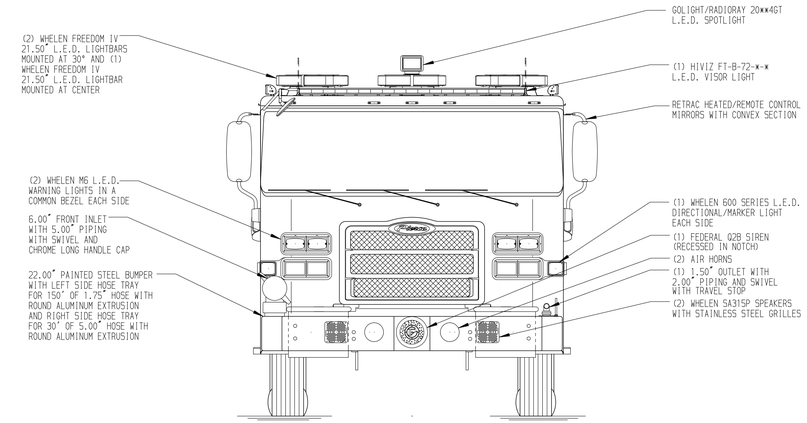

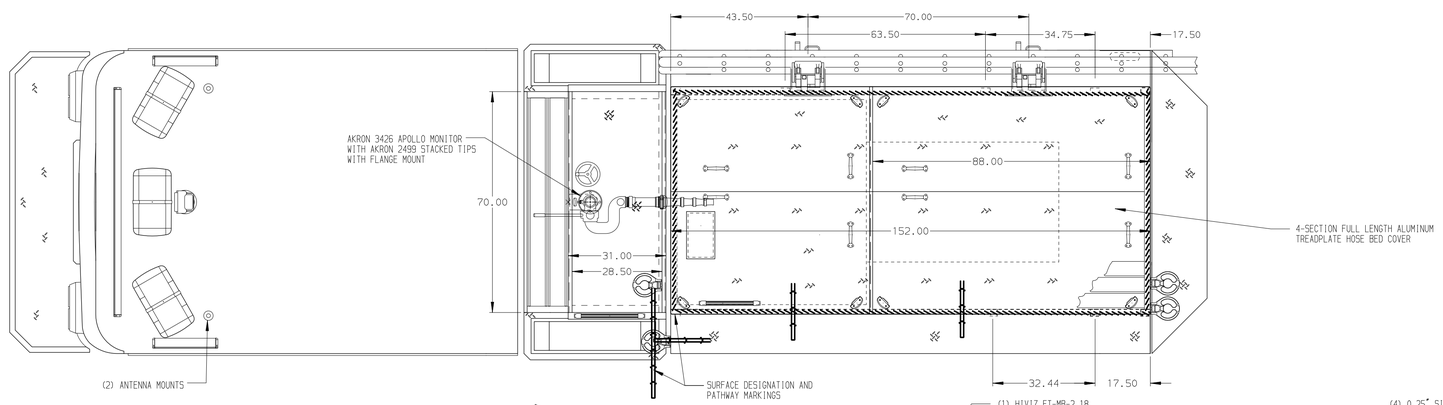

HOSEBED CAPACITIES

1. 500' OF 2.50" D.J. HOSE
2. 300' OF 1.75" D.J. HOSE
3. 500' OF 2.50" D.J. HOSE
4. 750' OF 5.00" D.J. HOSE
5. OPEN

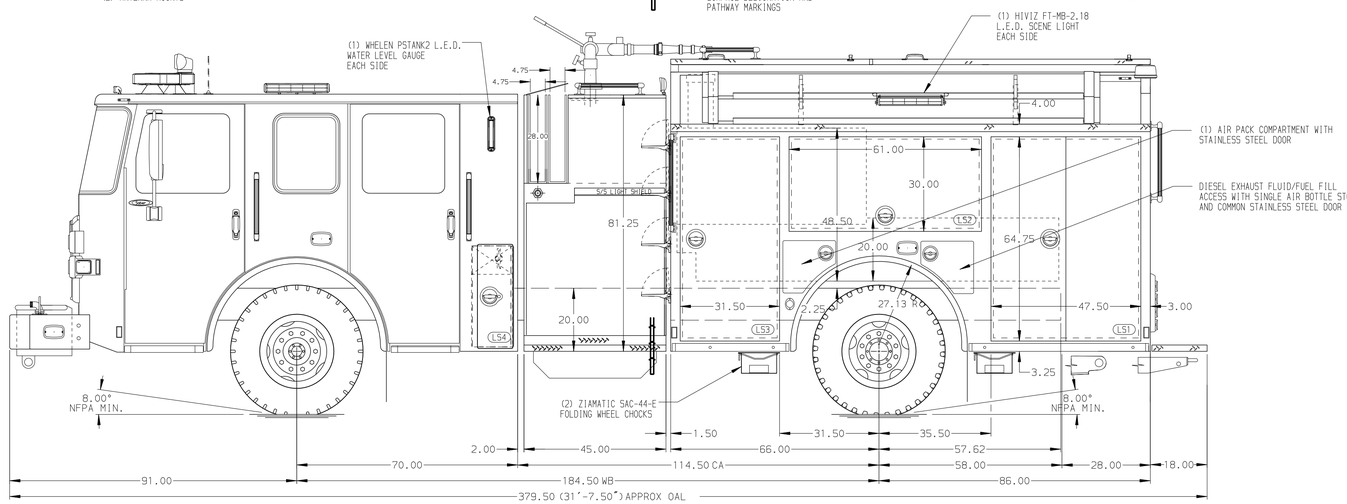

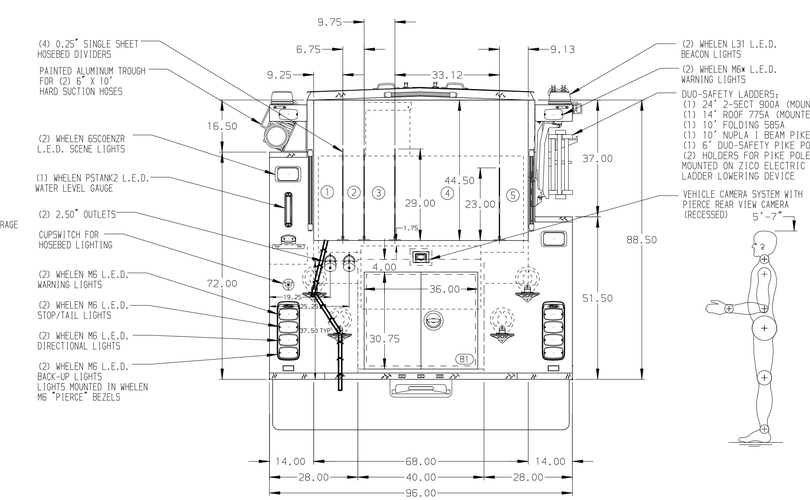

ALUMINUM BODY

NOTE

DIMENSIONS SHOWN ARE APPROXIMATE AND ARE SUBJECT TO MINOR DEVIATIONS AS MAY OCCUR OR BE NECESSARY IN CONSTRUCTION.
MINOR DETAILS NOT SHOWN.

REV	DATE	BY	CH
-	-	-	-

CUSTOMER APPROVAL

APPROVED BY: _____

DATE: _____

Pierce MANUFACTURING INC.

CHASSIS DATA	TITLE	1250-D-750P,152" BODY,LS FULL HEIGHT,RS 3/4 HEIGHT (2) CROSSLAYS, ZICO QUIC-LIFT LADDER RACK	JOB NO. 37947
MAKE: PIERCE	FOR	PETERSBURG BOROUGH PETERSBURG, ALASKA	SCALE 1:24 / DATE
MODEL: SABER FR	DWG NO.	37947AD	DRAWN BY LME 20JUN22
			CHECKED BY CZA 21JUN22
			SHEET SIZE D / SHEET NO. 1 OF 1

View File Created 21-JUN-2022 09:37:33