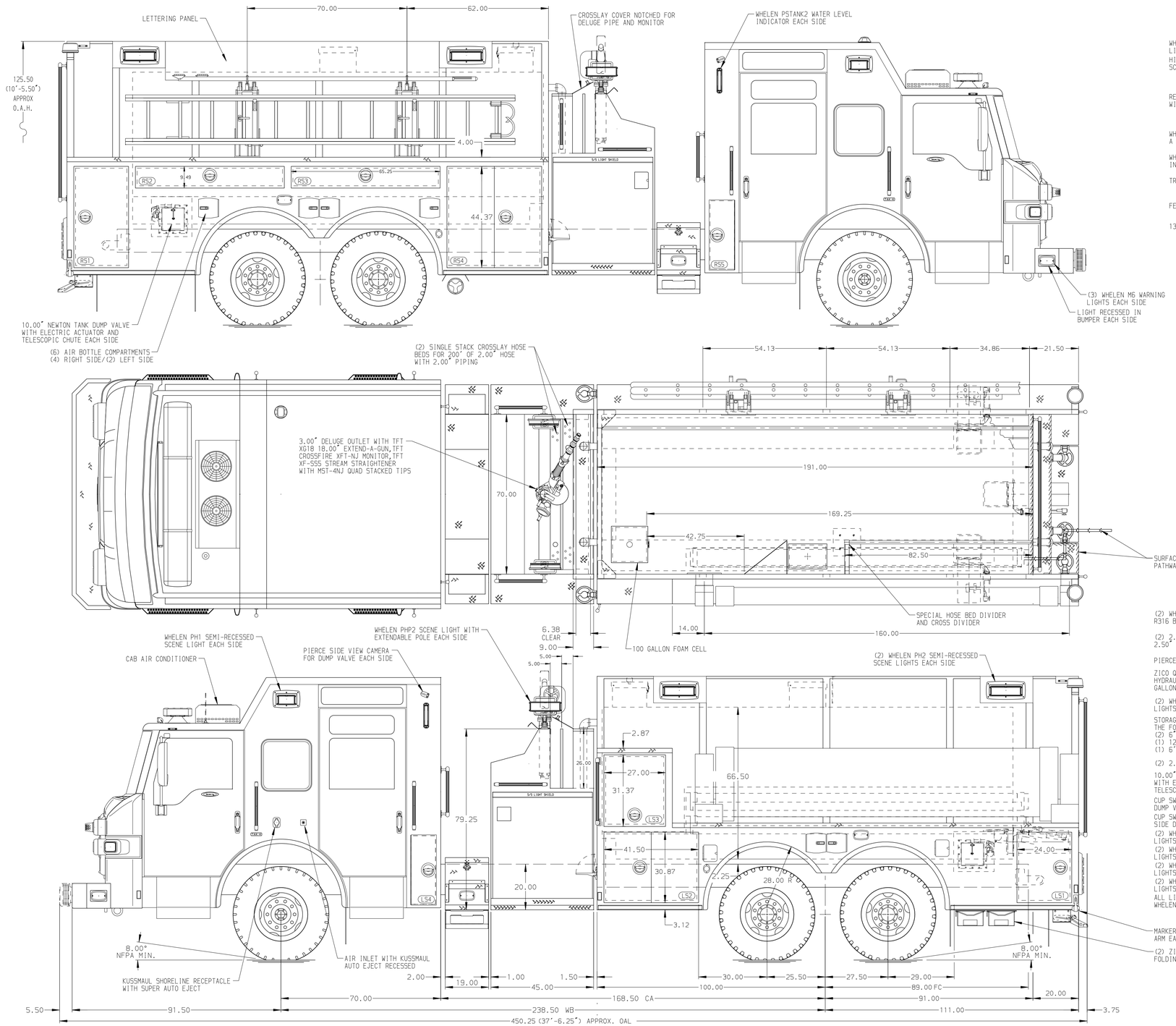

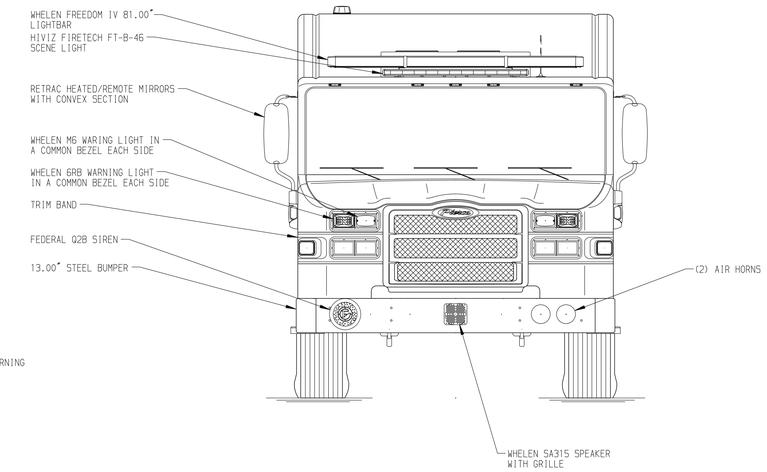

HOSEBED CAPACITIES

1. 200' OF 2.00" D.J. POLY HOSE
2. 1300' OF 5.00" D.J. POLY HOSE
3. 200' OF 2.00" D.J. POLY HOSE

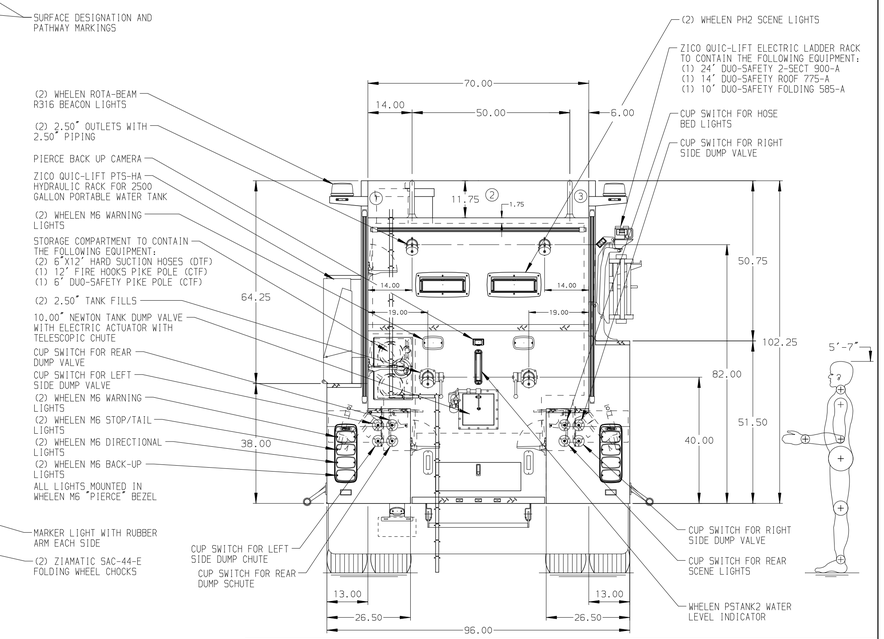

STAINLESS STEEL BODY | SIDE ROLL AND FRONTAL IMPACT PROTECTION

NOTE

DIMENSIONS SHOWN ARE APPROXIMATE AND ARE SUBJECT TO MINOR DEVIATIONS AS MAY OCCUR OR BE NECESSARY IN CONSTRUCTION.
MINOR DETAILS NOT SHOWN.

1. ELKHART EDUCTOR FOAM SYSTEM
2. BATTERY CHARGER LOCATED PER ORDER
3. BATTERY CHARGER INDICATOR LOCATED PER ORDER
4. TWO 120V DUPLEX RECEPTACLE LOCATED IN CAB PER ORDER
5. TWO 120V DUPLEX RECEPTACLES IN REAR BODY COMPARTMENT LOCATED PER ORDER

REV	DATE	BY	CH
7	13FEB24	BST	PHA
6	20NOV23	BST	PHA
5	20SEP23	BST	PHA
4	13JUN23	BST	NPE

CHASSIS DATA
MAKE: PIERCE
MODEL: VELOCITY

Pierce MANUFACTURING INC.

TITLE: 2000-D-2600P, 2500 GAL WATER W/100 GAL FOAM CELL 211" TANKER BODY, ZICO LADDER RACK, 45" TOP CONTROL
FOR: LANSING FIRE DISTRICT, LANSING, NEW YORK
DWG NO.: 37986AD

JOB NO.	37986
SCALE	1:24
DATE	
DRAWN BY	BST 24FEB23
CHECKED BY	PHA 24FEB23
SHEET SIZE	D
SHEET NO.	1 OF 1

View File Created 15-FEB-2024 13:16:01