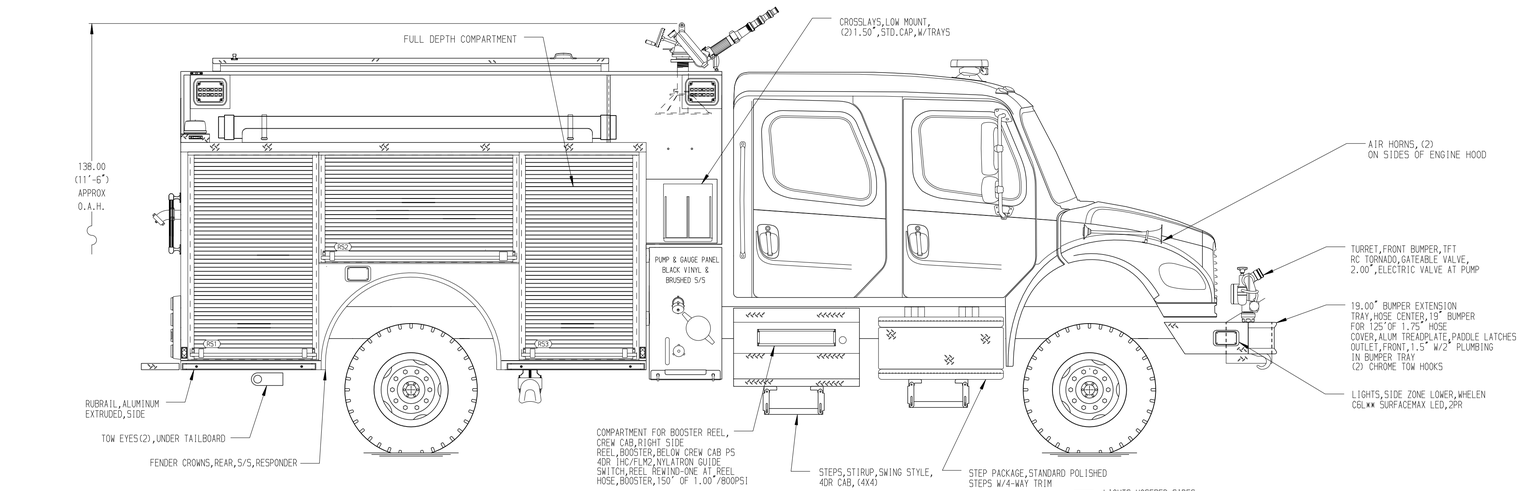

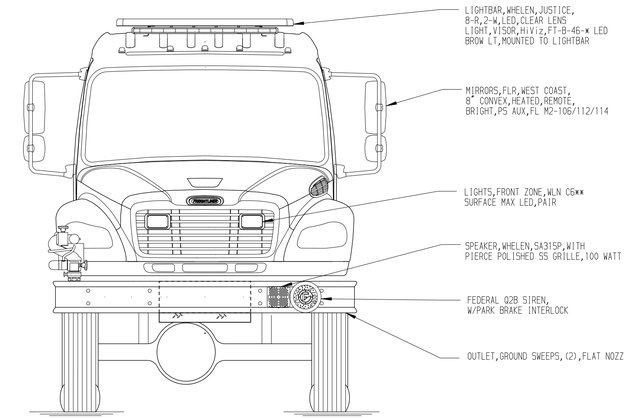

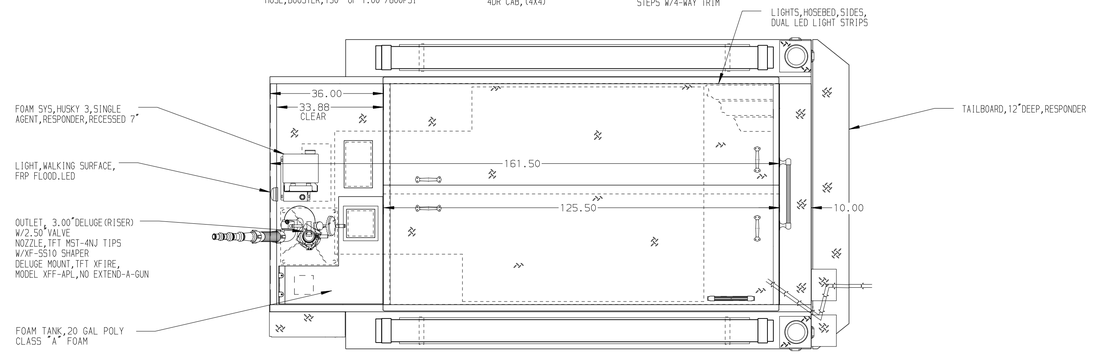

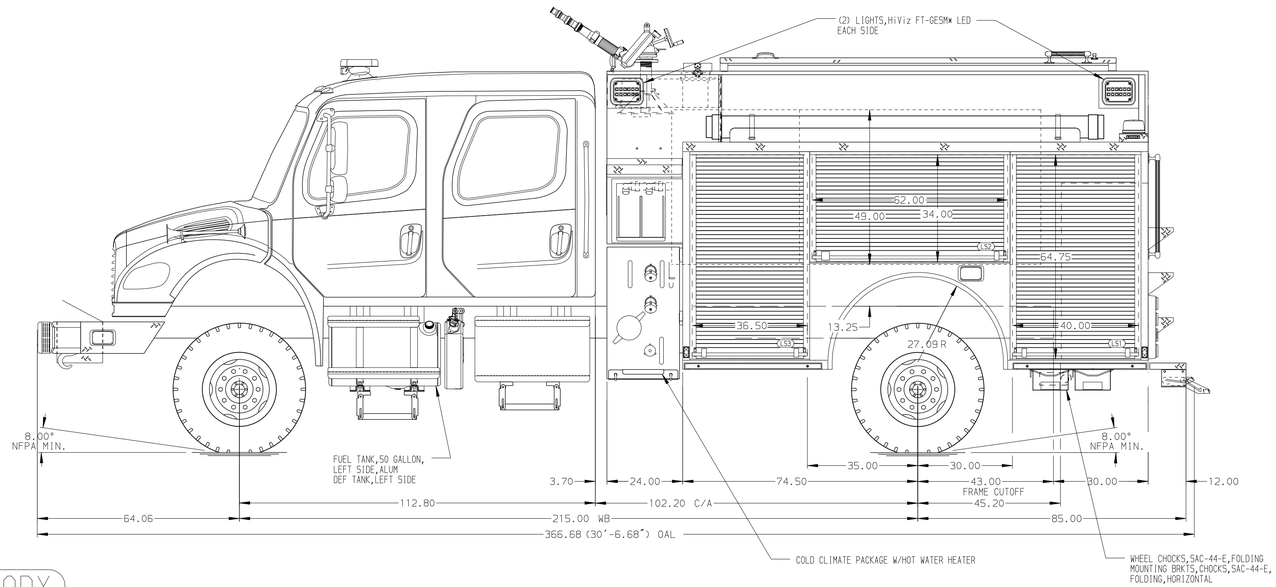

HOSEBED CAPACITIES

1. 800' OF 4.00" D.J. POLYESTER HOSE
2. 600' OF 2.50" D.J. POLYESTER HOSE
3. 200' OF 1.75" D.J. POLYESTER HOSE

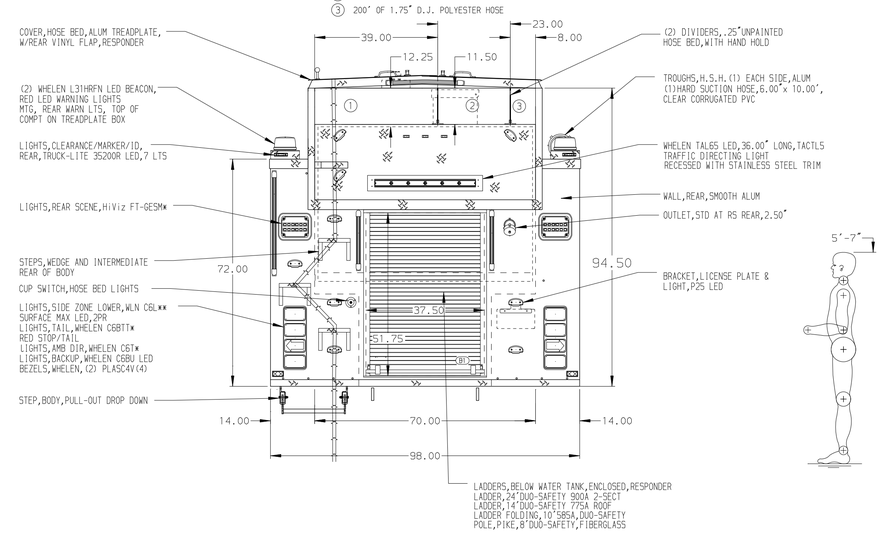

ALUMINUM BODY

NOTE

DIMENSIONS SHOWN ARE APPROXIMATE AND ARE SUBJECT TO MINOR DEVIATIONS AS MAY OCCUR OR BE NECESSARY IN CONSTRUCTION.
MINOR DETAILS NOT SHOWN.

REV	DATE	BY	CH
▽	-	-	-

CHASSIS DATA
MAKE: FL
MODEL: M2 106 4X4

Pierce MANUFACTURING INC.
BRADENTON, FLORIDA

TITLE: 1250-D-1250 POLY,20 FOAM 147.5"BODY DS&PS HIGH SIDE (2)1.5"CROSSLAYS

FOR: TABER,MD OF
TABER, ALBERTA T1G 2B9 CANADA

DWG NO.: 38011AD

JOB NO.	SCALE	DRAWN BY	CHECKED BY	SHEET SIZE	SHEET NO.
38011	1:24	JLA	AJA	D	1 OF 1

DATE: 06DEC22
07DEC22

View File Created 07-DEC-2022 11:25:50