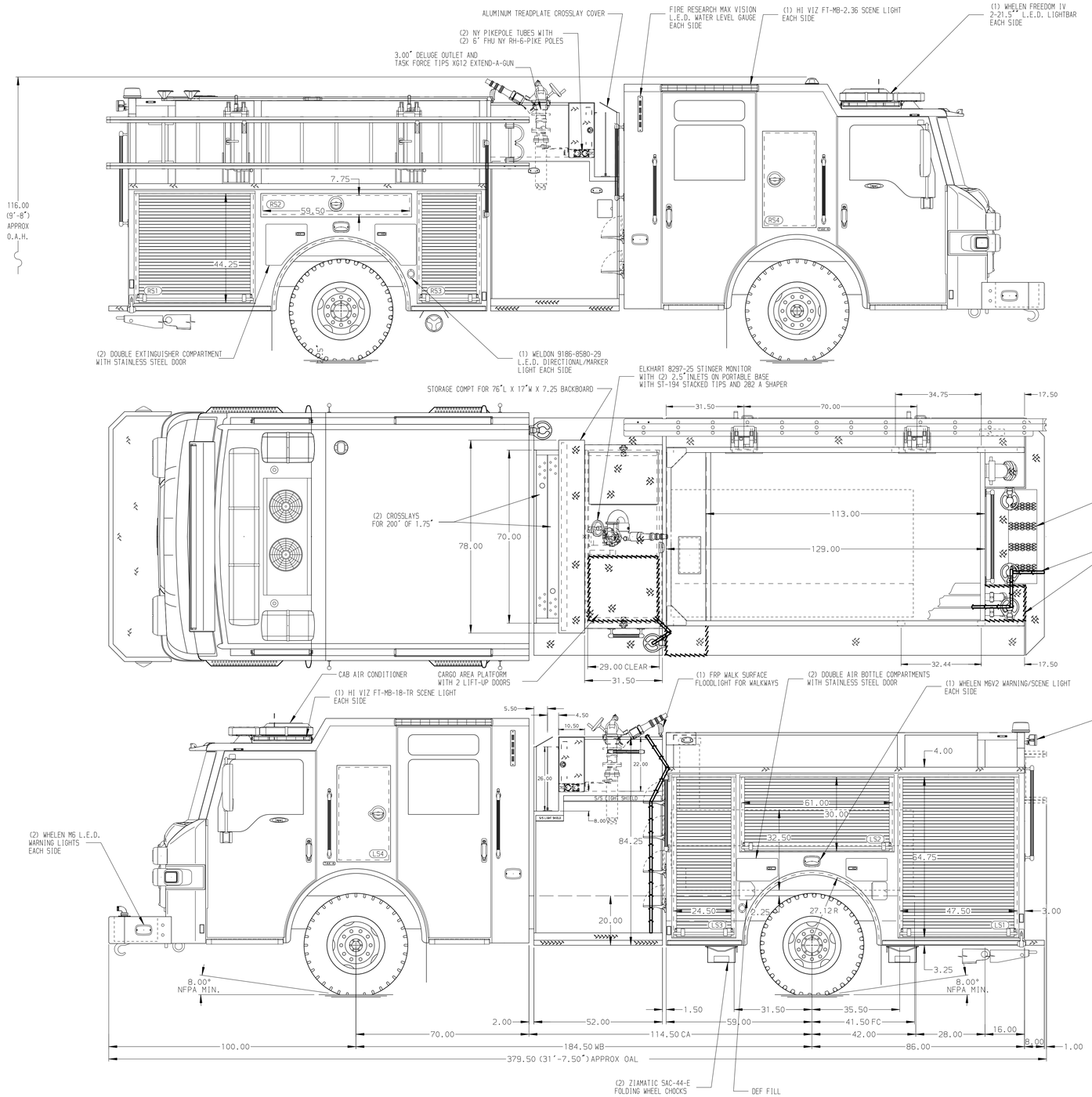

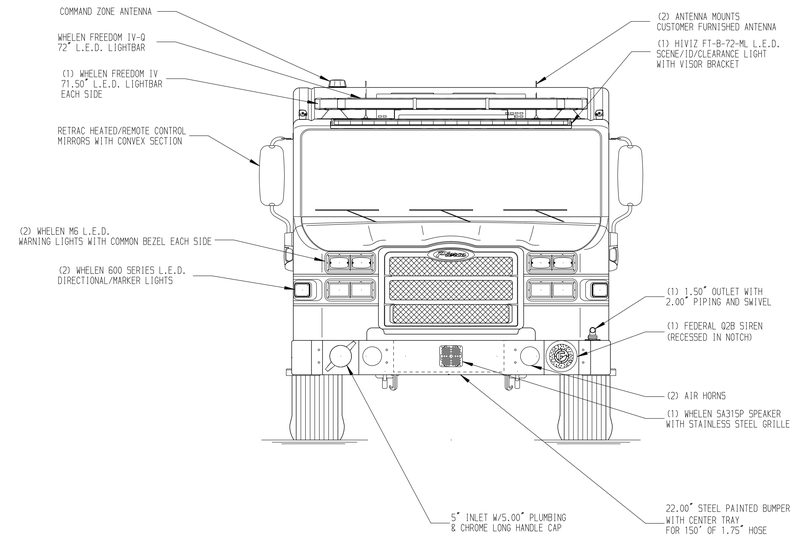

HOSEBED CAPACITIES

1. - 200' OF 2.50" D.J. POLY HOSE
2. - 200' OF 1.75" D.J. POLY HOSE
3. - 1200' OF 5.00" D.J. POLY HOSE
4. - 500' OF 3.00" D.J. POLY HOSE

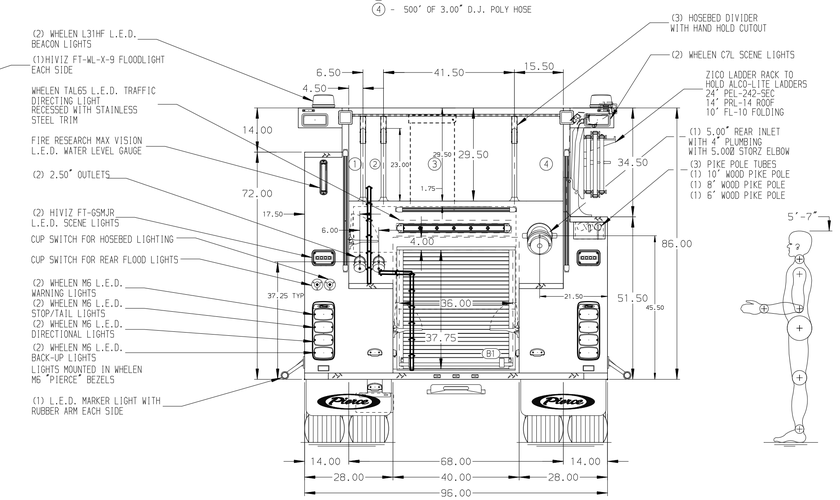

STAINLESS STEEL BODY

NOTE

DIMENSIONS SHOWN ARE APPROXIMATE AND ARE SUBJECT TO MINOR DEVIATIONS AS MAY OCCUR OR BE NECESSARY IN CONSTRUCTION.
MINOR DETAILS NOT SHOWN.

1. BATTERY CHARGER LOCATED BEHIND DRIVER SEAT
2. BATTERY CHARGE INDICATOR LOCATED NEAR DRIVER'S SEAT RISER WITH BRACKET
3. DUAL L.E.D. LIGHT STRIPS LOCATED IN HOSE BED
4. DRIP PAN GUARD FOR ROLL-UP DOOR LOCATED ?
5. EIGHT FULL WIDTH/DEPTH ADJUSTABLE SHELVES LOCATED PER SHOP ORDER
6. ALUMINUM PEGBOARD ON BACK WALL OF COMPARTMENT PER ORDER
7. ON SPOT AUTOMATIC TIRE CHAINS TO BE LOCATED AT REAR
8. AIRLET W/DISCONNECT COUPLING LOCATED PER SHOP ORDER
9. SHORELINE RECEPTICAL WITH KUSSMAUL SUPER AUTO EJECT LOCATED PER SHOP ORDER
10. TWO NEMA DUPLEX RECEPTICALES LOCATED PER SHOP ORDER

CUSTOMER APPROVAL

APPROVED BY: _____

DATE: _____

Pierce MANUFACTURING INC.

REV	DATE	BY	CH
▽	-	-	-

CHASSIS DATA
MAKE: PIERCE
MODEL: IMPEL FR

TITLE: 1250-D-500P, 500 GALLON WATER TANK, 145" FDLER BODY RS ZICO LADDER RACK, (2) CROSSLAYS, DELUGE, 52" SC

FOR: PEORIA FIRE DEPARTMENT, PEORIA, ILLINOIS

DWG NO.: 38024AD

JOB NO.	SCALE	DRAWN BY	CHECKED BY	SHEET SIZE	SHEET NO.
38024 01-02	1:24	SDS	EGO	D	1 OF 1

DATE: 120CT22 280CT22

View File Created 28-OCT-2022 10:32:37