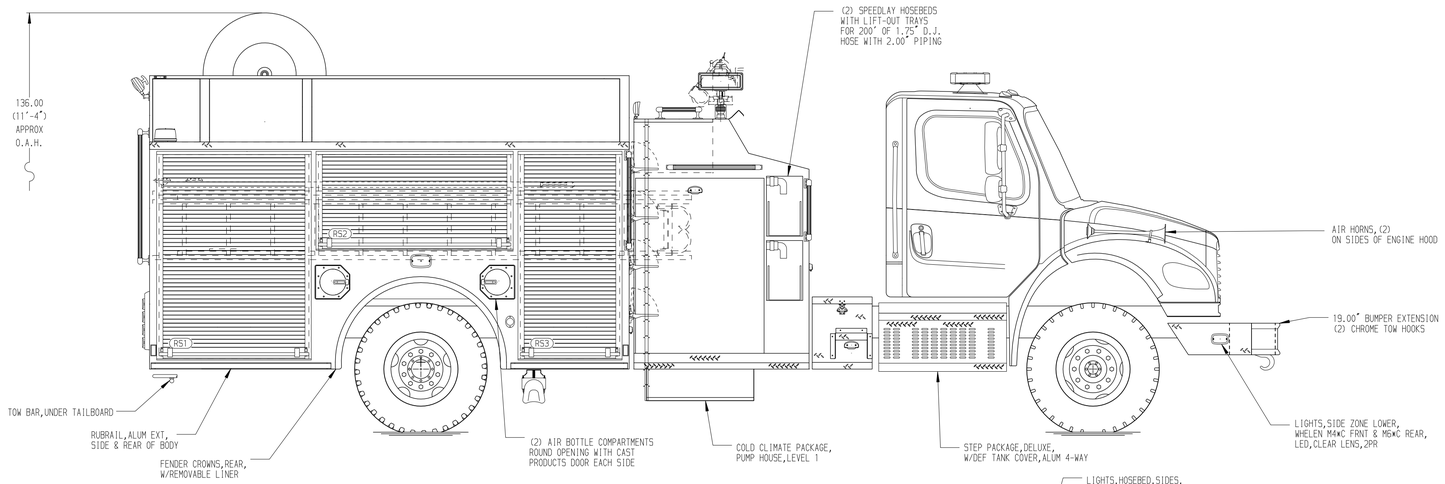


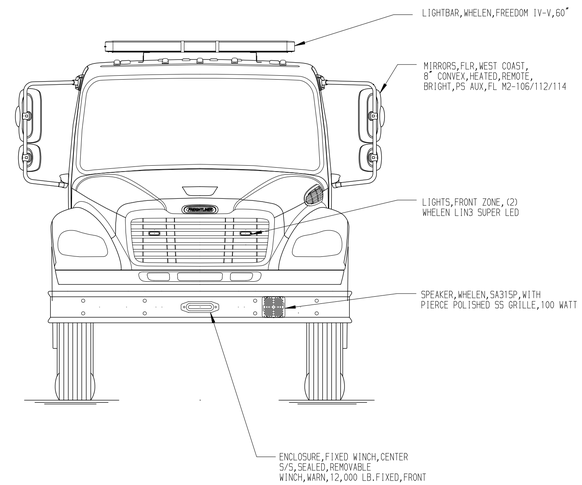


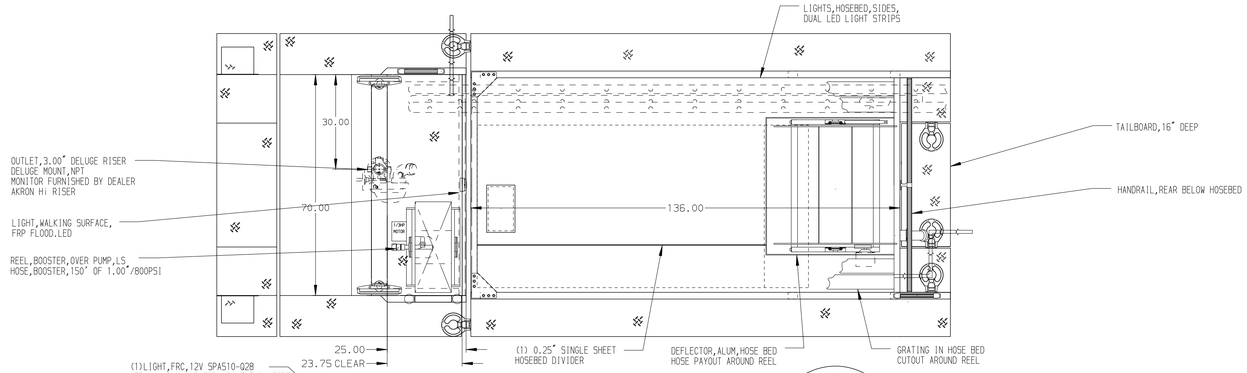


HOSEBED CAPACITIES

1. 150' OF 1.75" DJP HOSE
2. 1000' OF 3.00" DJP HOSE

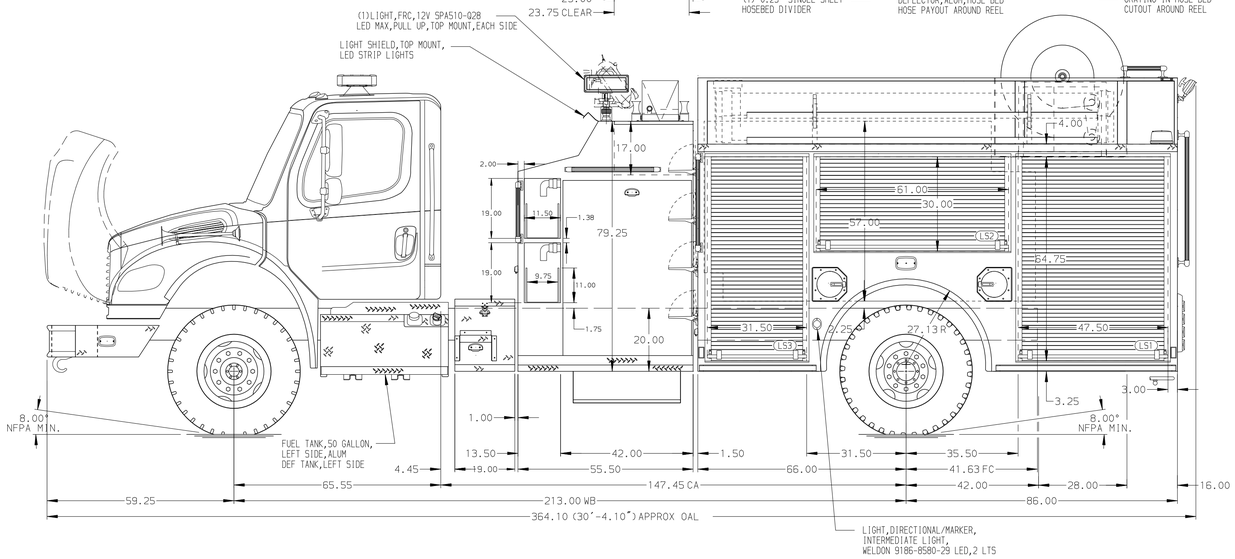


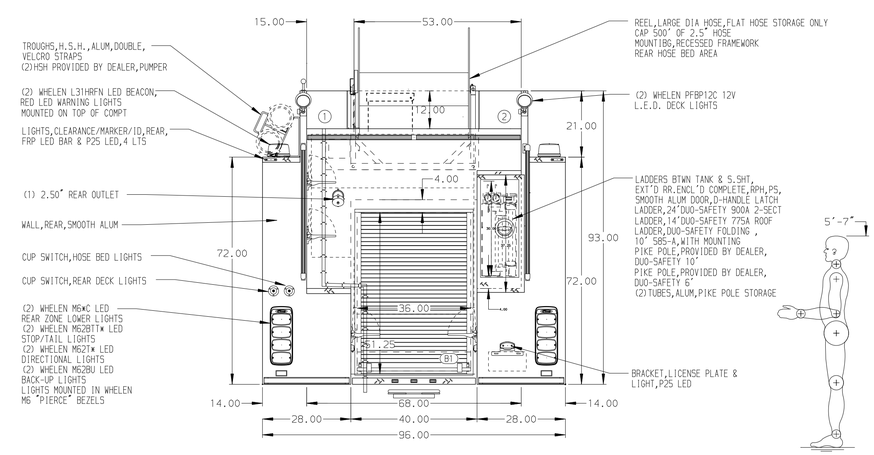


ALUMINUM BODY

NOTE

DIMENSIONS SHOWN ARE APPROXIMATE AND ARE SUBJECT TO MINOR DEVIATIONS AS MAY OCCUR OR BE NECESSARY IN CONSTRUCTION.
MINOR DETAILS NOT SHOWN.

| REV | DATE | BY | CH |
|---|---|---|---|
| ▽ | - | - | - |

CHASSIS DATA
MAKE: FL
MODEL: M2-106

**Pierce MANUFACTURING INC.**

TITLE: 1250-D-1000P,152"BODY,LS&RS FULL HEIGHT FRT&RR FDLER 42"TP MNT,W/19"WALKWAY,(2)1.5"SPEEDLAYS W/POLY TRAYS

FOR: POCAHONTAS FIRE DEPT.AR
POCAHONTAS, ARKANSAS

DWG NO.: 38046AD

| JOB NO. | SCALE | DRAWN BY | CHECKED BY | SHEET SIZE | SHEET NO. |
|---|---|---|---|---|---|
| 38046 | 1:24 | JLA | AJA | D | 1 OF 1 |

DATE: 07DEC22
08DEC22

View File Created 08-DEC-2022 11:20:00