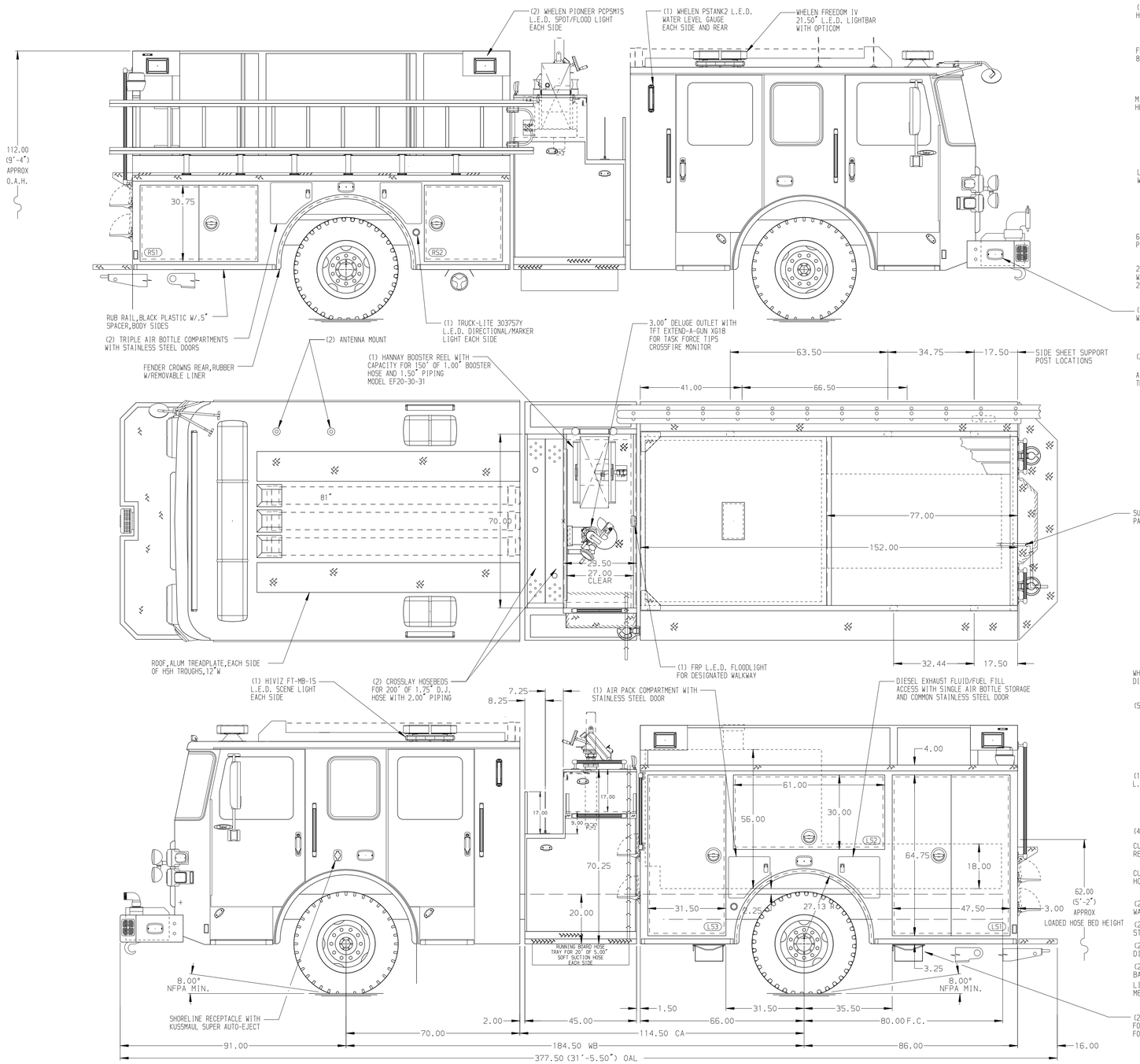

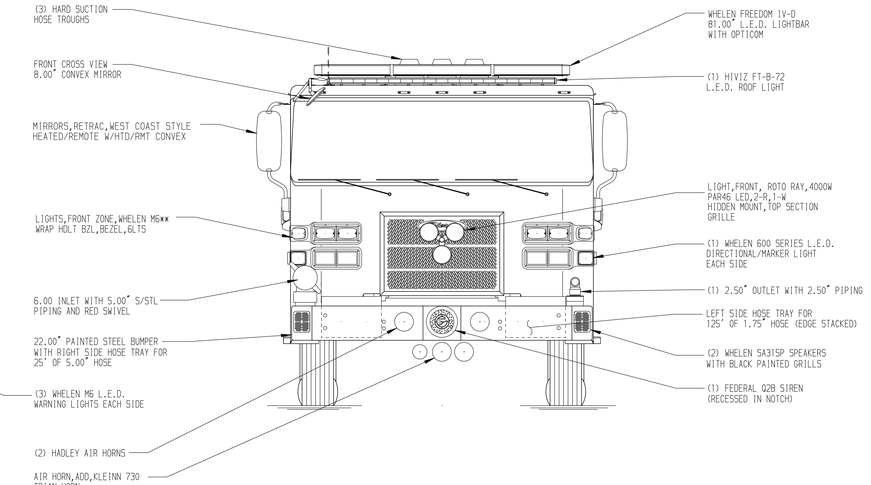

HOSEBED CAPACITIES

1. 200' OF 1.75" D.J. POLY HOSE
2. 400' OF 1.75" D.J. POLY HOSE
3. 500' OF 3.00" D.J. POLY HOSE
4. 1000' OF 5.00" D.J. POLY HOSE
5. 200' OF 2.50" D.J. POLY HOSE
6. 200' OF 1.75" D.J. POLY HOSE

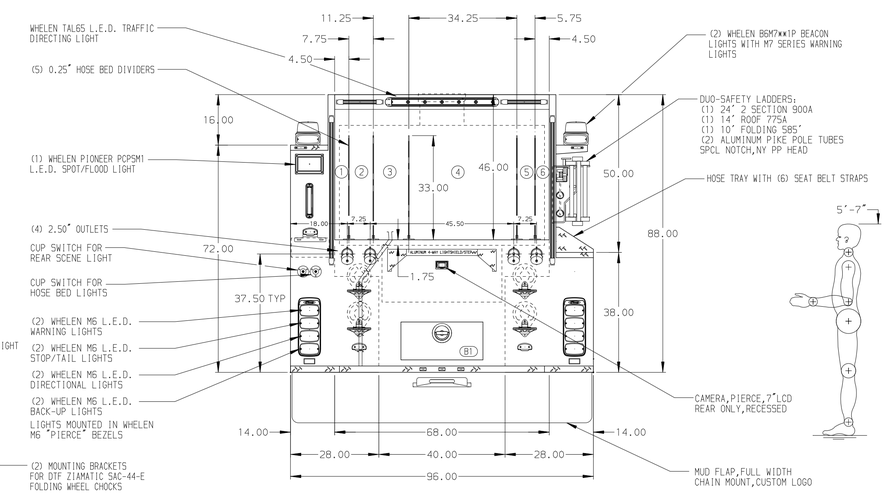

ALUMINUM BODY | MAXIMUM O.A.L. 379.00" | MAXIMUM O.A.H. 112.00" | SIDE ROLL AND FRONTAL IMPACT PROTECTION

NOTE

DIMENSIONS SHOWN ARE APPROXIMATE AND ARE SUBJECT TO MINOR DEVIATIONS AS MAY OCCUR OR BE NECESSARY IN CONSTRUCTION.
MINOR DETAILS NOT SHOWN.

REV	DATE	BY	CH
V	06JAN23	KLE	CCS
V	04NOV22	JLA	CCS
V	01JUL22	LST	WKL

CHASSIS DATA
MAKE: PIERCE
MODEL: SABER FR

Pierce MANUFACTURING INC.

TITLE: 1500-D-1000P,152,FULL HEIGHT LS,LOW RS,FDLER (2) X-LAYS,DELUGE,HOSE REEL
FOR: MILTON FIRE DEPARTMENT, MILTON, DELAWARE
DWG NO.: 38047AD

JOB NO.	38047
SCALE	1:24
DATE	
DRAWN BY	JWO
	31MAY22
CHECKED BY	CDU
	07JUN22
SHEET SIZE	D
SHEET NO.	1 OF 1

View File Created 09-JAN-2023 09:44:47