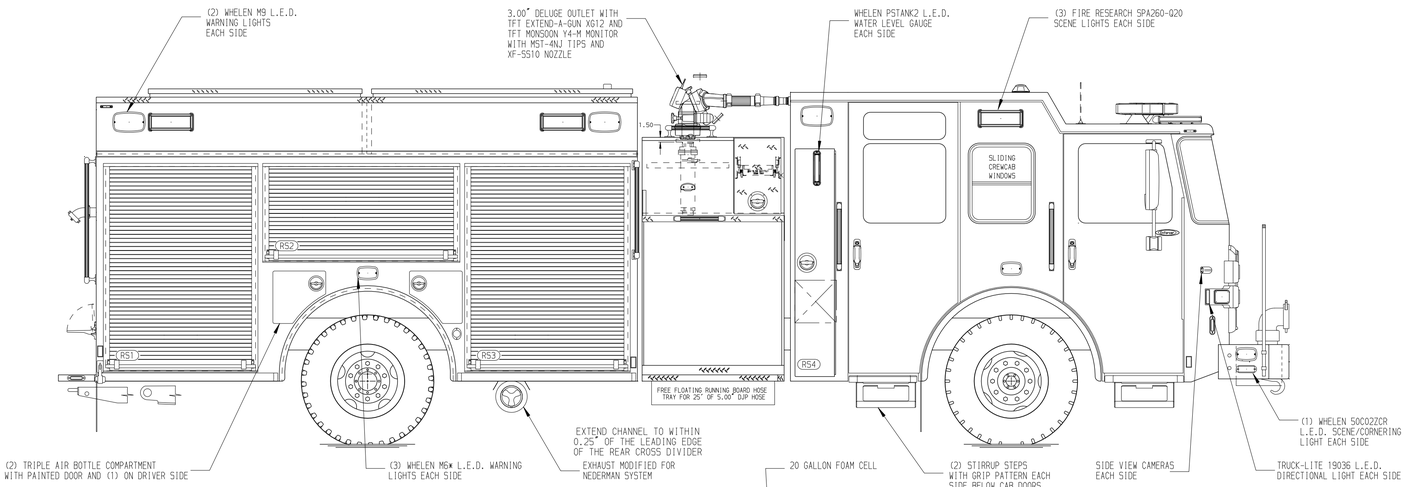

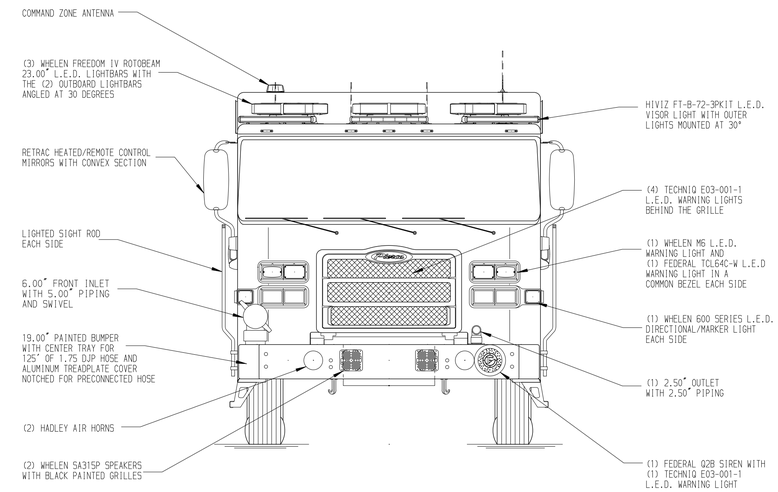

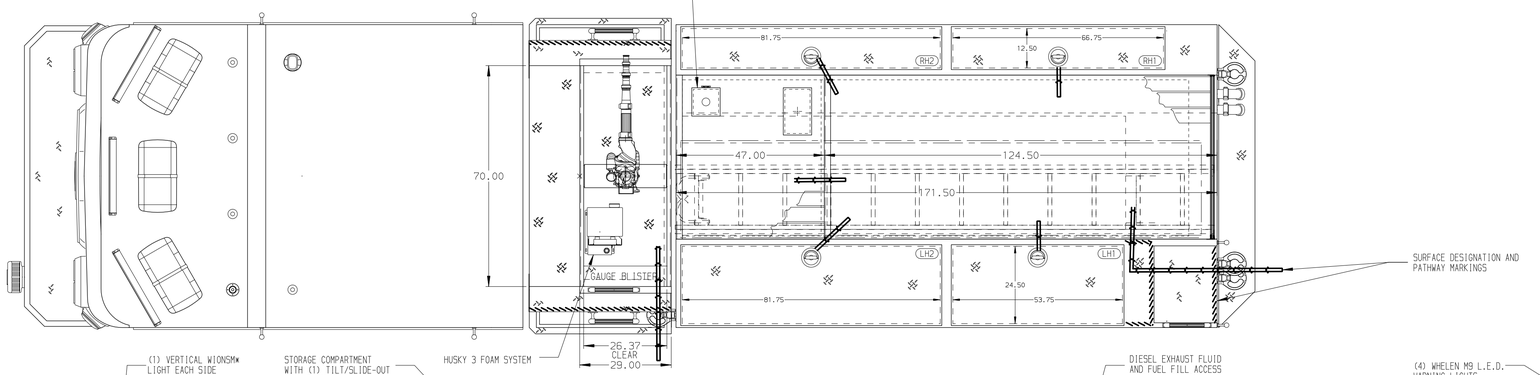

HOSEBED CAPACITIES

1 - 1000' OF 5.00" D.J. POLY HOSE
2 - 800' OF 2.50" D.J. POLY HOSE
3 - 200' OF 1.75" D.J. POLY HOSE (ABOVE)
200' OF 2.50" D.J. POLY HOSE (BELOW)
4 - 200' OF 1.75" D.J. POLY HOSE (ABOVE)
200' OF 2.50" D.J. POLY HOSE (BELOW)

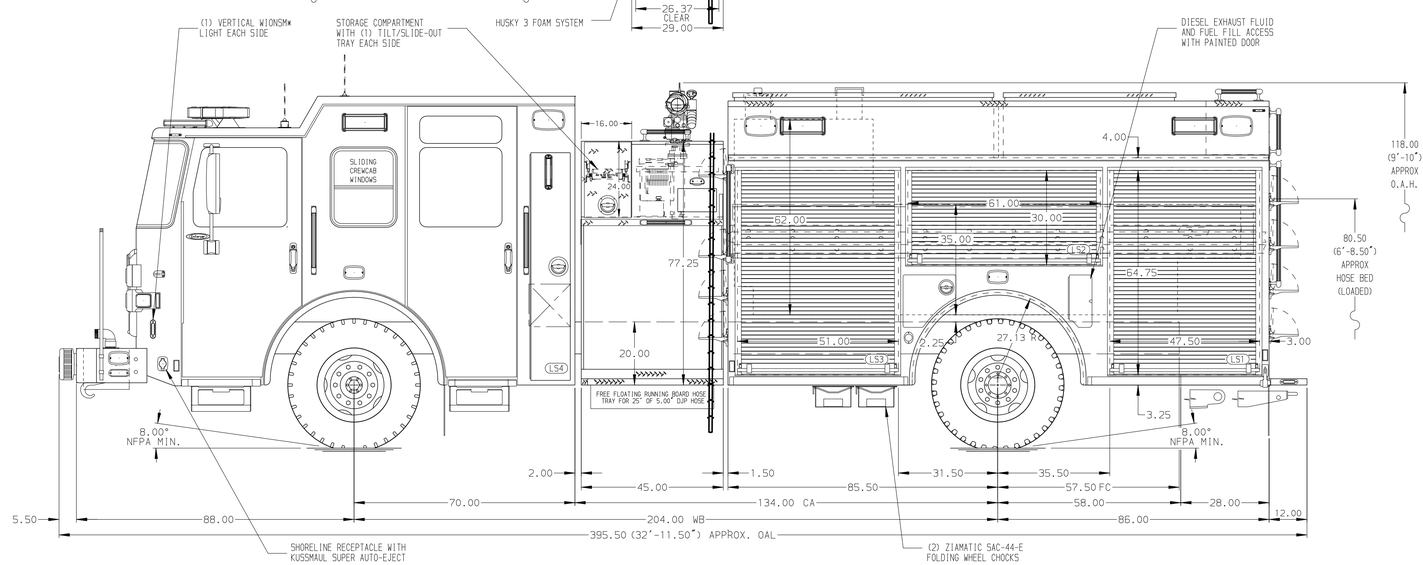

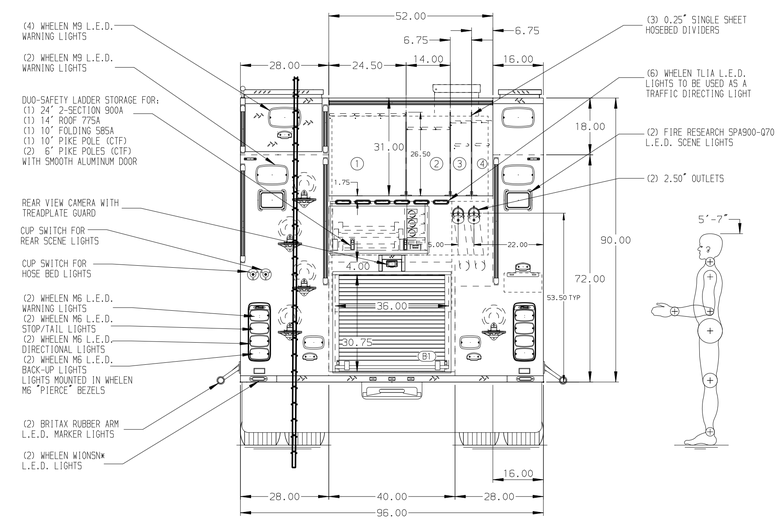

ALUMINUM BODY

MAXIMUM O.A.H. 118.00"

NOTE

DIMENSIONS SHOWN ARE APPROXIMATE AND ARE SUBJECT TO MINOR DEVIATIONS AS MAY OCCUR OR BE NECESSARY IN CONSTRUCTION.
MINOR DETAILS NOT SHOWN.

1. ONSPOT AUTOMATIC TIRE CHAINS TO BE PROVIDED AT REAR
2. 3 PIECE DOOR MOUNTED ANCHOR PLATE FOR NEDERMAN EXHAUST SYSTEM HOSE LOCATED PER SHOP ORDER
3. BATTERY CHARGER LOCATED PER SHOP ORDER
4. BATTERY CHARGER INDICATOR LOCATED ON DRIVER'S SEAT RISER
5. DUAL L.E.D. LIGHT STRIPS LOCATED IN HOSE BED
6. DRIP PAN GUARD FOR ROLL-UP DOOR LOCATED PER SHOP ORDER
7. AIR OUTLET WITH SHUT OFF VALVE LOCATED PER SHOP ORDER
8. AIR INLET WITH KUSSMAUL AIR EJECT LOCATED PER SHOP ORDER
9. KUSSMAUL AIR COMPRESSOR LOCATED PER SHOP ORDER

REV	DATE	BY	CH
V	08APR24	JJB	CSH
V	20FEB24	JJB	CSH
V	09NOV23	JJB	CSH
V	25OCT23	JJB	CSH
V	14SEP23	JJB	CSH

CHASSIS DATA: MAKE PIERCE; MODEL ENFORCER

Pierce MANUFACTURING INC.

TITLE: 2000-D-770P,750G WATER,20G FOAM,171"LS FHFD,RS FDLER THRU TUNNEL LADDERS, 45" SIDE CONTROL, DELUGE

FOR: DOBBS FERRY, DOBBS FERRY, NEW YORK

DWG NO. 38066AD-SH1

JOB NO.	38066
SCALE	1:24
DATE	
DRAWN BY	JJB 08JUN23
CHECKED BY	EGO 09JUN23
SHEET SIZE	D
SHEET NO.	1 OF 2

View File Created 08-APR-2024 13:42:36