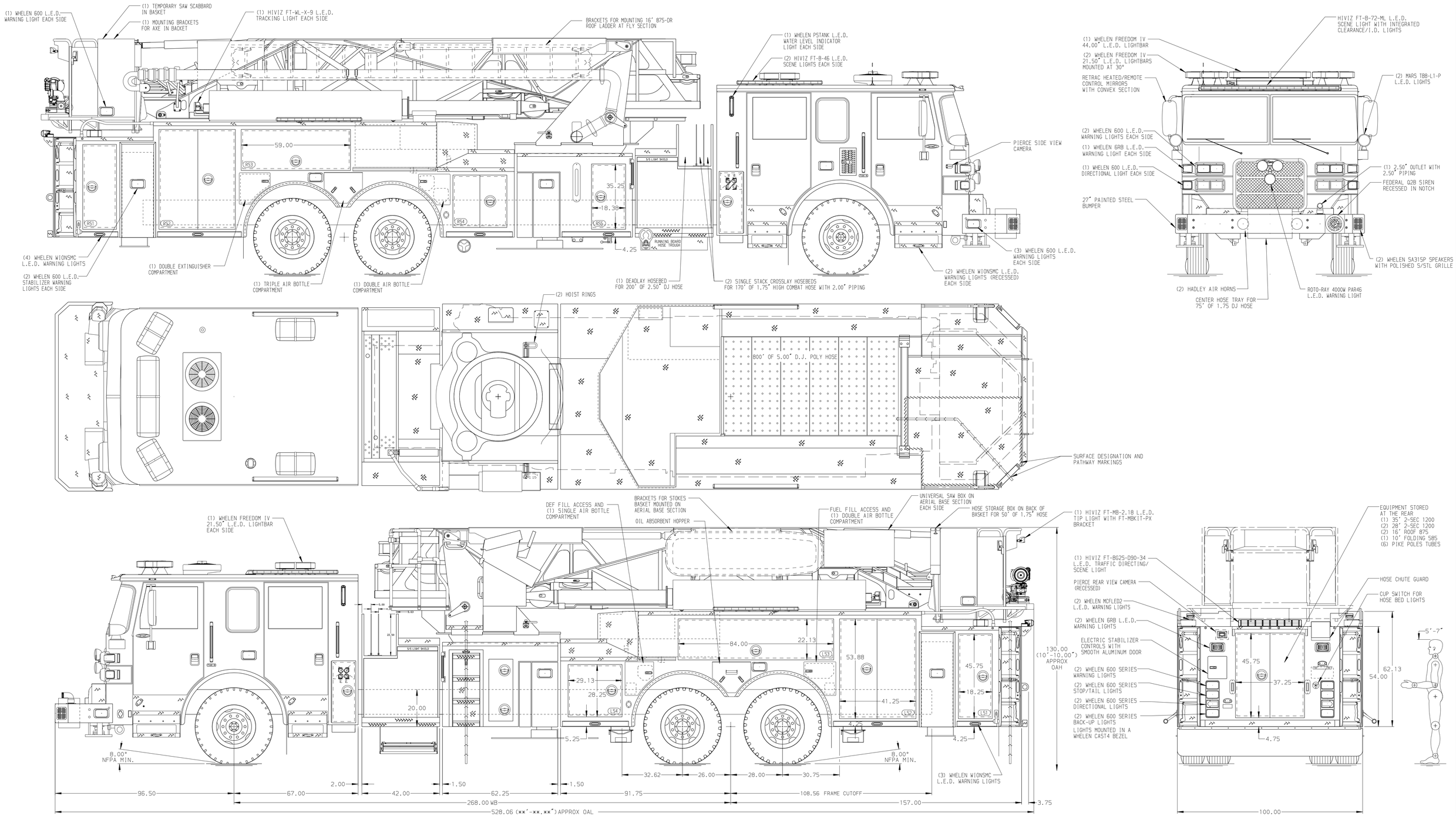

ALUMINUM BODY | SIDE ROLL & FRONTAL IMPACT PROTECTION | MAX O.A.H. = 11' - 9.00"

NOTE

DIMENSIONS SHOWN ARE APPROXIMATE AND ARE SUBJECT TO MINOR DEVIATIONS AS MAY OCCUR OR BE NECESSARY IN CONSTRUCTION.
MINOR DETAILS NOT SHOWN.

1. SHORELINE RECEPTACLE WITH KUSSMAUL SUPER AUTO-EJECT LOCATED ON DRIVER SIDE CAB CORNER
2. AIR INLET WITH DISCONNECT COUPLING IN THE DRIVER SIDE STEPWELL
3. BATTERY CHARGER LOCATED BEHIND DRIVER SEAT PER ORDER
4. BATTERY CHARGE INDICATOR LOCATED BY DRIVER'S SEAT WITH BRACKET
5. SEVEN ADJUSTABLE SHELVES LOCATED IN COMPARTMENTS PER ORDER
6. DUAL LIGHT STRIPS LOCATED IN COMPARTMENTS PER ORDER
7. ONE ADJUSTABLE HEIGHT SLIDE-OUT TRAY LOCATED IN COMPARTMENT PER ORDER
8. ONE SPECIAL SIDE HEIGHT SHELF LOCATED IN COMPARTMENT PER ORDER
9. FOUR POLY TOOL BOXES LOCATED IN COMPARTMENTS PER ORDER
10. ONE FLOOR MOUNTED SLIDE-OUT TRAY LOCATED IN COMPARTMENT PER ORDER
11. TWO SLIDE-OUT ALUMINUM TOOLBOARDS LOCATED IN COMPARTMENTS PER ORDER
12. ONW SWING-OUT ALUMINUM TOOLBOARD LOCATED IN COMPARTMENT PER ORDER
13. ONE VERTICAL DIVIDER LOCATED IN COMPARTMENT PER ORDER
14. ONE ROLLED HOSE STORAGE RACK LOCATED IN COMPARTMENT PER ORDER
15. NON-RAISED AERIAL PEDESTAL
16. 3-in-1 LYFECOMBO BRACKETS AT AERIAL BASKET
17. TECNIQ RUNG LIGHTING AT AERAIL DEVICE
18. DC POWER TO AERIAL TIP
19. TWO HIVIZ FT-WL-X-9 LIGHTS UNDER BASKET STEPS
20. FIRE RESEARCH 2-WAY INTERCOM
21. FIVE RECEPTACLES LOCATED IN COMPARTMENTS PER ORDER

REV	DATE	BY	CH
E	22FEB24	ANZ	JLL
D	08NOV23	ANZ	JLL
C	06NOV23	ANZ	JLL
B	07SEP23	ANZ	JLL
A	12MAY23	ANZ	BYO

CHASSIS DATA
MAKE: PIERCE
MODEL: ARROW XT

Pierce MANUFACTURING INC.

TITLE: 100' ASCENDANT AERIAL TOWER AND BODY ASSEMBLY
300 GALLON WATER TANK
FOR: NORTH 321 VOLUNTEER FIRE DEPARTMENT
LINCOLNTON, NC

DWG NO. 38078AD

JOB NO.	38078
SCALE 1:24	DATE
DRAWN BY ANZ	27APR23
CHECKED BY BYO	04MAY23
SHEET SIZE D	SHEET NO. 1 OF 1

View File Created 23-FEB-2024 07:00:43