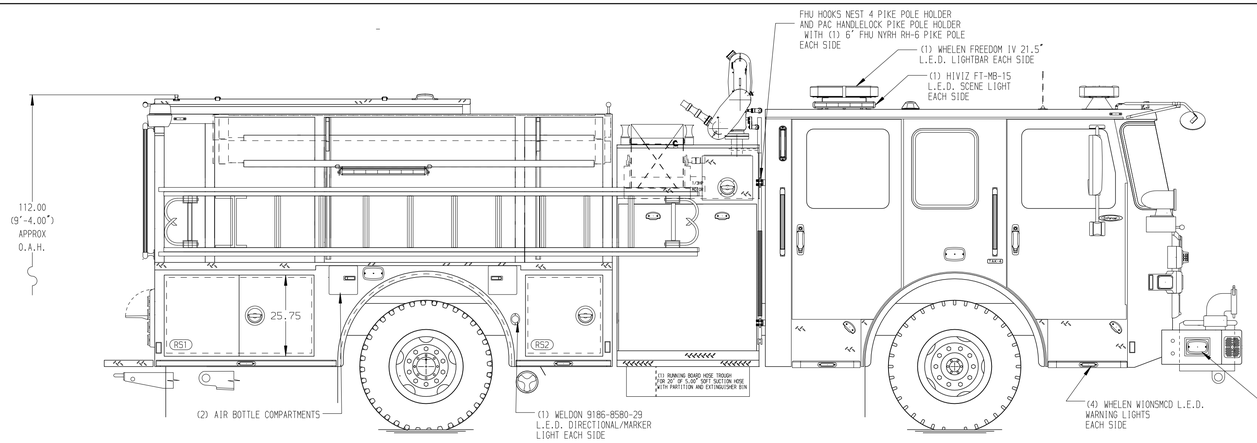

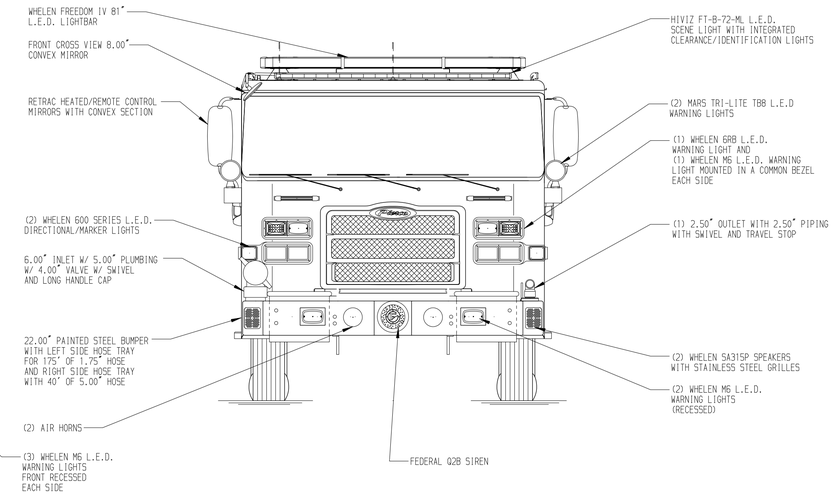

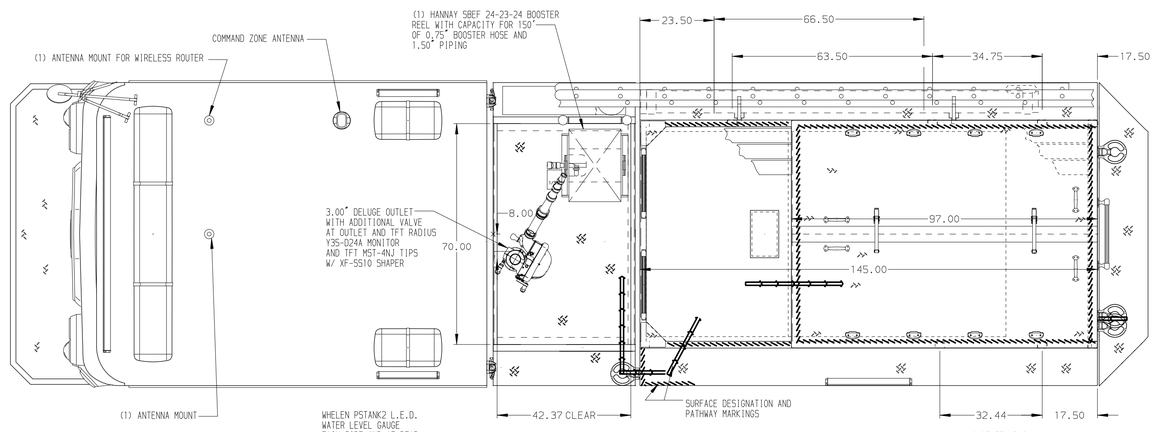

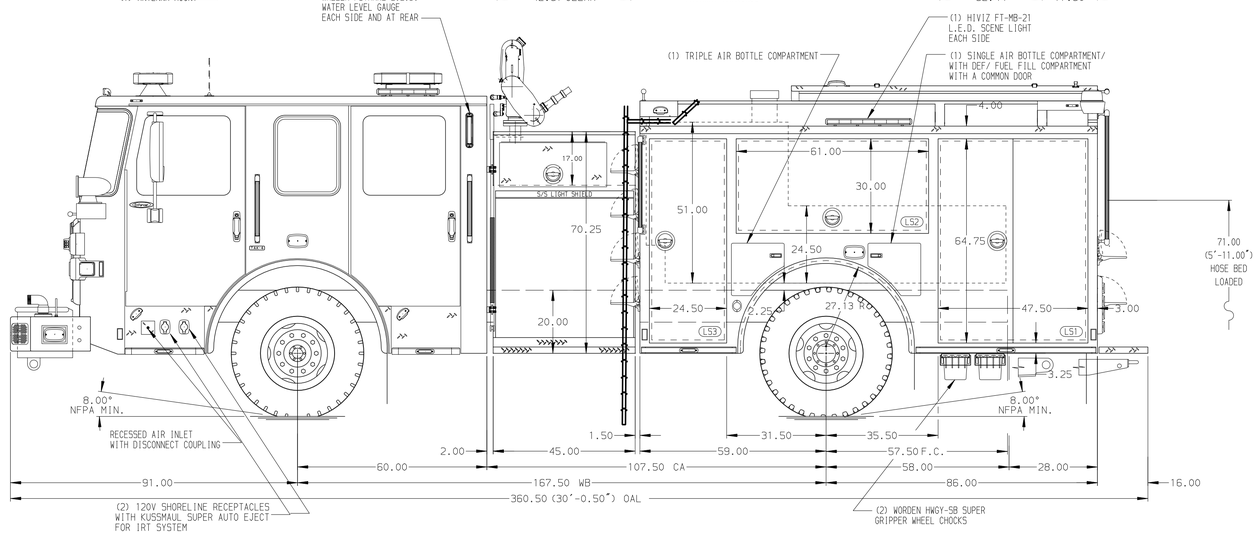

HOSEBED CAPACITIES

1. 400' OF 1.75" FDNY KEY HOSE
2. 200' OF 1.75" FDNY KEY HOSE
3. 300' OF 1.75" FDNY KEY HOSE
4. 1000' OF 5.00" HY FLOW KEY
5. 300' OF 3.00" KEY ECO 10 HOSE
6. 300' OF 2.00" KEY COMBAT READY HOSE

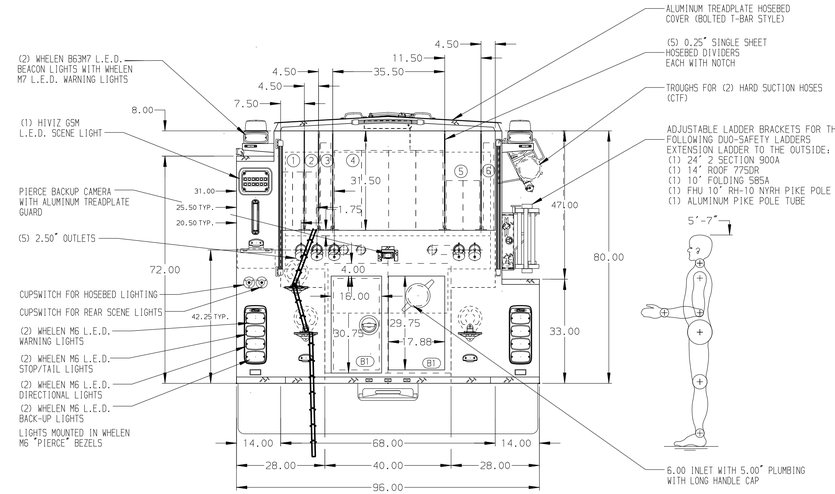

ALUMINUM BODY

SIDE ROLL AND FRONTAL IMPACT PROTECTION

NOTE

DIMENSIONS SHOWN ARE APPROXIMATE AND ARE SUBJECT TO MINOR DEVIATIONS AS MAY OCCUR OR BE NECESSARY IN CONSTRUCTION.
MINOR DETAILS NOT SHOWN.

1. RUD AUTOMATIC TIRE CHAINS TO BE PROVIDED AT THE REAR
2. BATTERY CHARGER LOCATED PER SHOP ORDER
3. BATTERY CHARGER INDICATOR LOCATED IN THE CAB PER SHOP ORDER
4. DUAL L.E.D. LIGHT STRIPS LOCATED IN HOSE BED
5. L.E.D. LIGHT STRIP LOCATED ON THE FRONT OF THE HOSEBED
6. REVERSED HINGED DOOR ON LS3 AND RS2
7. TWO FULL WIDTH/DEPTH ADJUSTABLE SHELVES LOCATED PER SHOP ORDER
8. ONE FLOOR MOUNTED SLIDE-OUT TRAY LOCATED PER SHOP ORDER
9. PARTITION BETWEEN LS1/B1 AND RS1/ B1
10. ONE VERTICAL PARTITION LOCATED PER SHOP ORDER
11. ONE PEGBOARD ON THE BACK WALL OF COMPARTMENT PER SHOP ORDER
12. NYLON STRAP WITH VELCRO IN ONE COMPARTMENT PER SHOP ORDER
13. ONE 120V NEMA DUPLEX RECEPTACLES LOCATED IN THE BODY PER SHOP ORDER
14. ONE FIXED SHELF LOCATED PER SHOP ORDER

REV	DATE	BY	CH
V	16NOV23	LST	JGO
V	29SEP23	LST	JGO
V	22JUN23	CDU	CZA

CHASSIS DATA
MAKE: PIERCE
MODEL: ENFORCER

Pierce MANUFACTURING INC.

TITLE: 1500-D-750 GAL POLY
145" BODY, LADDER BRACKETS, DELUGE, BOOSTER REEL

FOR: TOWN OF KNIGHTDALE FIRE DEPARTMENT
KNIGHTDALE, NORTH CAROLINA

DWG NO.: 38089AD

JOB NO.: 38089 01-02
SCALE: 1:24
DATE
DRAWN BY: LST 06JUN23
CHECKED BY: CDU 09JUN23
SHEET SIZE: D
SHEET NO.: 1 OF 1

View File Created 27-NOV-2023 11:52:45