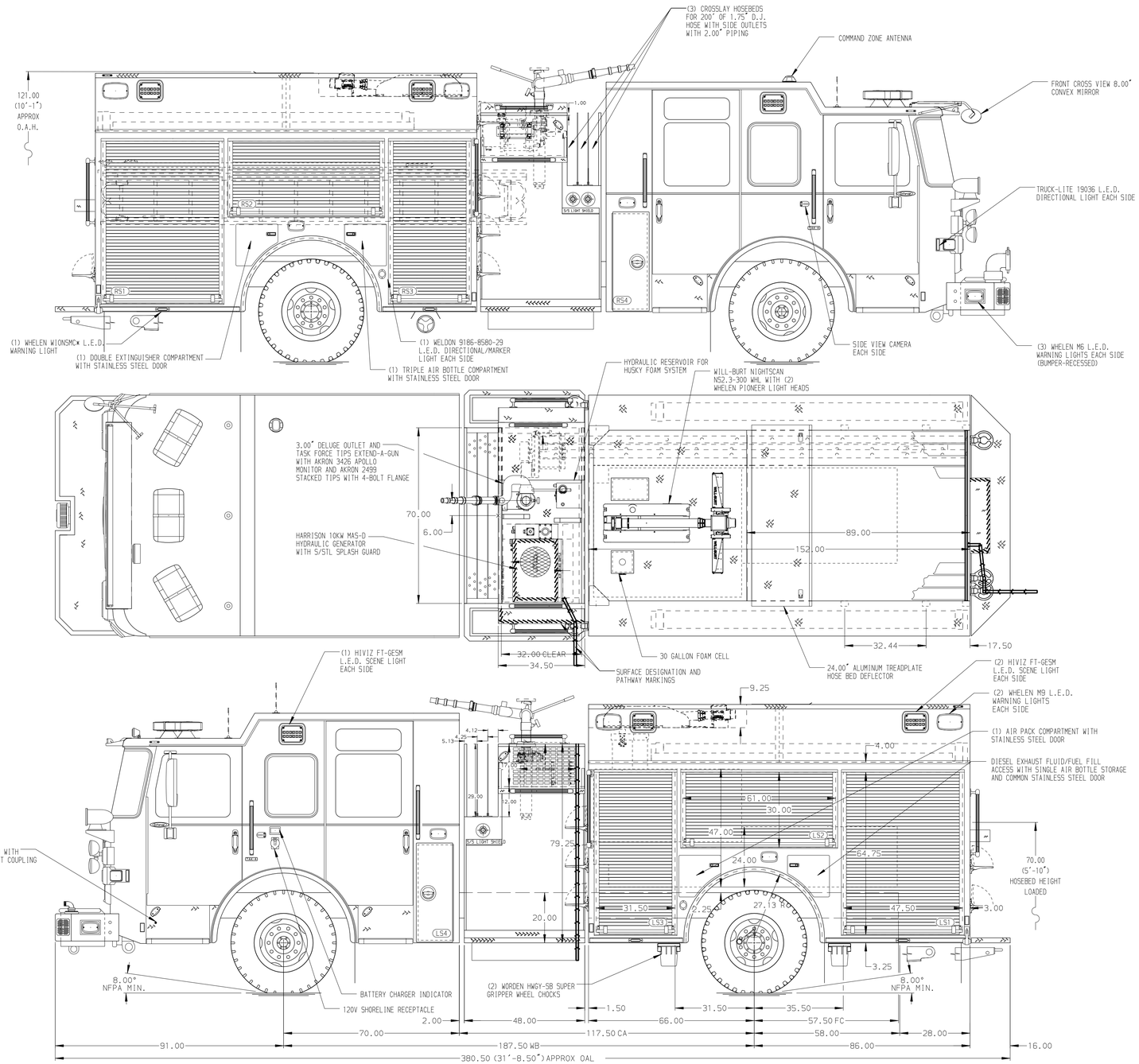

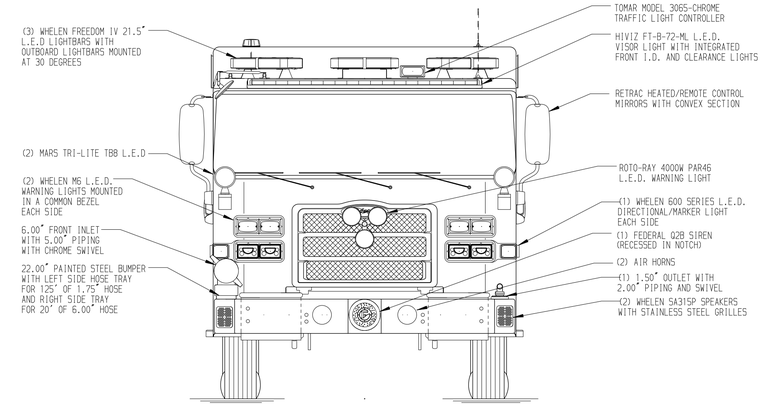

HOSEBED CAPACITIES

1. 200' OF 2.50" SPO MERCEDES MTFS-800-DP HOSE
2. 200' OF 3.00" SPO MERCEDES MTFS-800-DP HOSE
3. 200' OF 1.75" SPO MERCEDES MTFS-800-DP HOSE
4. 1350' OF 5.00" SPO MERCEDES MEGAFLO HOSE
5. 300' OF 3.00" SPO MERCEDES MTFS-800-DP HOSE

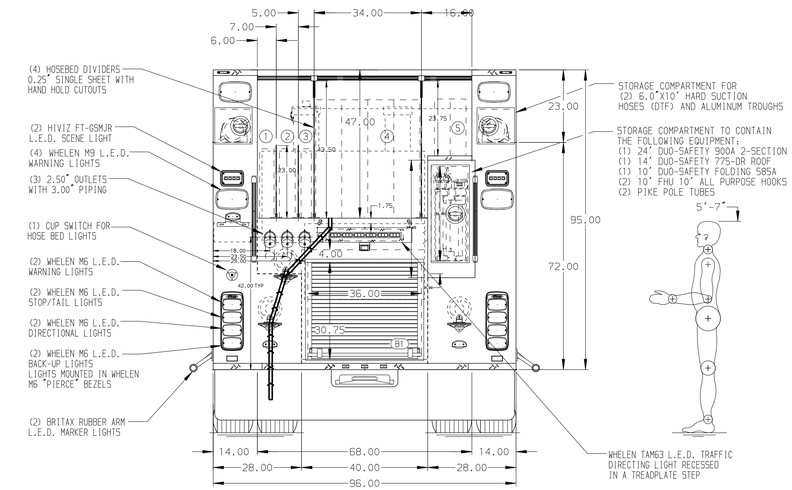

ALUMINUM BODY

NOTE

DIMENSIONS SHOWN ARE APPROXIMATE AND ARE SUBJECT TO MINOR DEVIATIONS AS MAY OCCUR OR BE NECESSARY IN CONSTRUCTION.
MINOR DETAILS NOT SHOWN.

1. ONSPOT AUTOMATIC TIRE CHAINS TO BE PROVIDED AT REAR
2. BATTERY CHARGER LOCATED BEHIND DRIVER SEAT
3. DUAL L.E.D. LIGHT STRIPS LOCATED IN HOSE BED
4. L.E.D. LIGHT STRIP LOCATED ON THE FRONT OF THE HOSEBED
5. SEVEN DRIP PANS GUARD FOR ROLL-UP DOORS LOCATED PER ORDER
6. CIRCUIT BREAKER PANEL LOCATED PER ORDER
7. ONE HANNAY ELECTRIC REWIND CORD REEL MODEL 1616-17-18 LOCATED PER ORDER WITH 150' OF 10/3 CABLE WITH ALUMINUM TREADPLATE COVER
8. NINE 120V DUPLEX RECEPTACLES LOCATED PER ORDER

REV	DATE	BY	CH
D	06NOV23	KLE	COS
C	04OCT23	LME	COS
B	27SEP23	LME	COS
A	22JUN23	CDU	CZA

CHASSIS DATA
MAKE: PIERCE
MODEL: ENFORCER

Pierce MANUFACTURING INC.

TITLE: 1500-D-780P, 750G WATER, 30G FOAM, 152" PUMPER BODY (3)XLAYS, GENERATOR, LADDERS BTWN TANK & SIDE SHEET
FOR: ALPHA FIRE COMPANY - STATE COLLEGE
STATE COLLEGE, PENNSYLVANIA
DWG NO.: 38097AD

JOB NO.	38097
SCALE 1:24	DATE
DRAWN BY LME	12JUN23
CHECKED BY CDU	13JUN23
SHEET SIZE D	SHEET NO. 1 OF 1

View File Created 07-NOV-2023 10:46:19