PUMPER

BODY
Long Aluminum 2nd Gen Pumper

CHASSIS
Enforcer Chassis

CHASSIS

AXLE, FRONT, CUSTOM
18,000 lb Dana Axle

AXLE, REAR
27,000 lb Dana Axle

ENGINE
380 HP Cummins L9 Engine

TRANSMISSION
Allison 5th Gen, 3000 EVS P

BUMPER
NON Extended Stainless Steel

CAB
6010 Enforcer Cab

BODY

WATER TANK
1000 Gallon Poly Water Tank

COMPT, PUMPER, REAR
44.50" FF RollUp Rear Compt

COMPT, PUMPER, LEFT SIDE
161" RollUp Full Height Front & Rear FDLER

COMPT, PUMPER, RIGHT SIDE
161" RollUp Full Height Front & Rear FDLER

FIRE SUPPRESSION

PUMPHOUSE
45" Control Zone Side Mount

PUMP
1500 GPM Waterous CXC20

CROSSLAYS, 1.50"
1.50" Crosslays Not Required

CROSSLAYS, 2.50"
2.50" Crosslay Not Required

SPEEDLAYS
Speedlays Not Required

GENERATOR
Generator Not Required

Foam System
Foam System Not Required

Foam Cell
Foam Cell Not Required

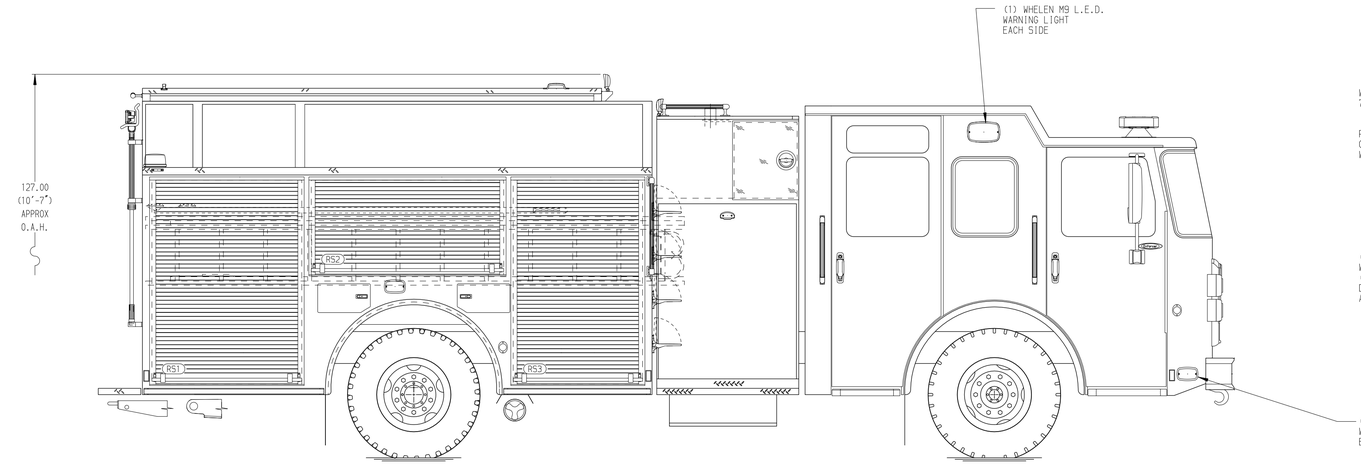

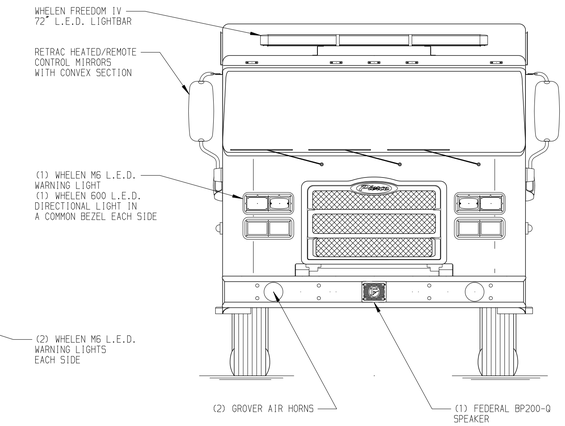

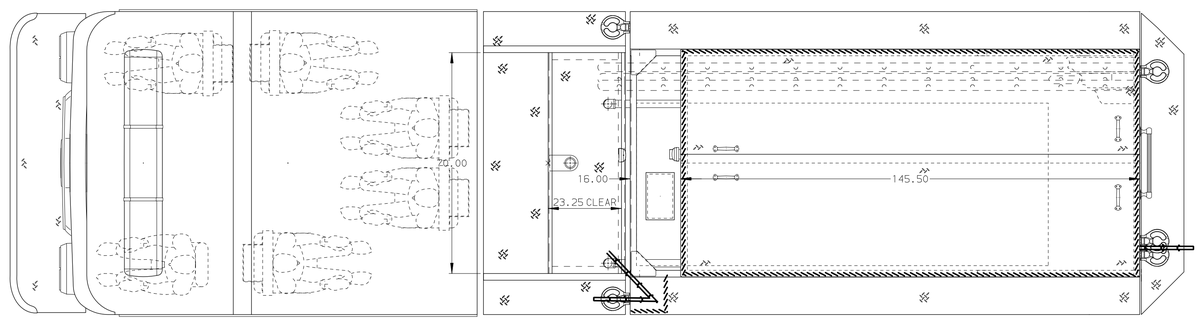

HOSEBED CAPACITY

BED 1
200' OF 1.50" D.J. POLY HOSE

BED 2
800' OF 2.50" D.J. POLY HOSE

BED 3
800' OF 2.50" D.J. POLY HOSE

BED 4
200' OF 1.50" D.J. POLY HOSE

BED 5
200' OF 1.50" D.J. POLY HOSE

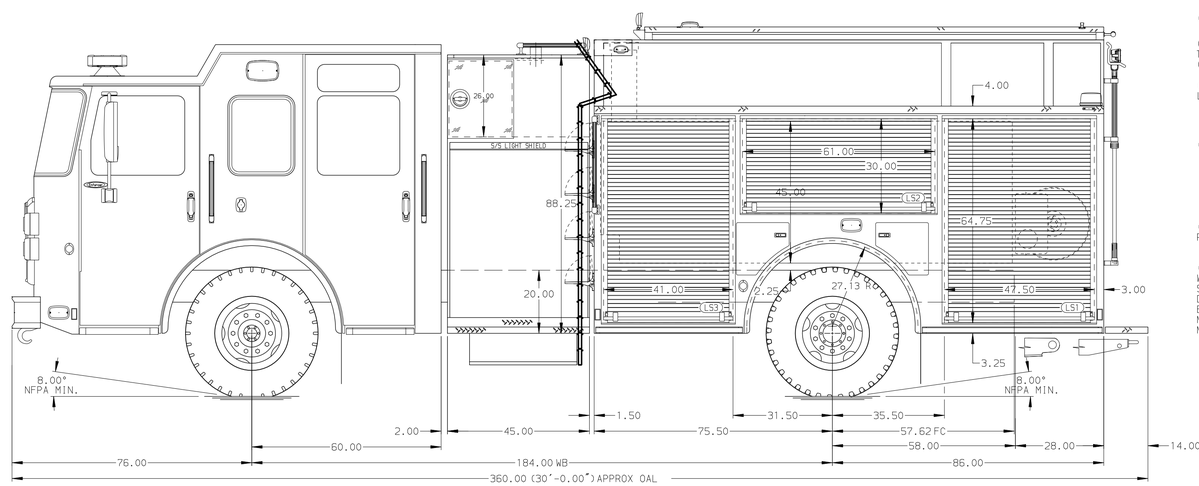

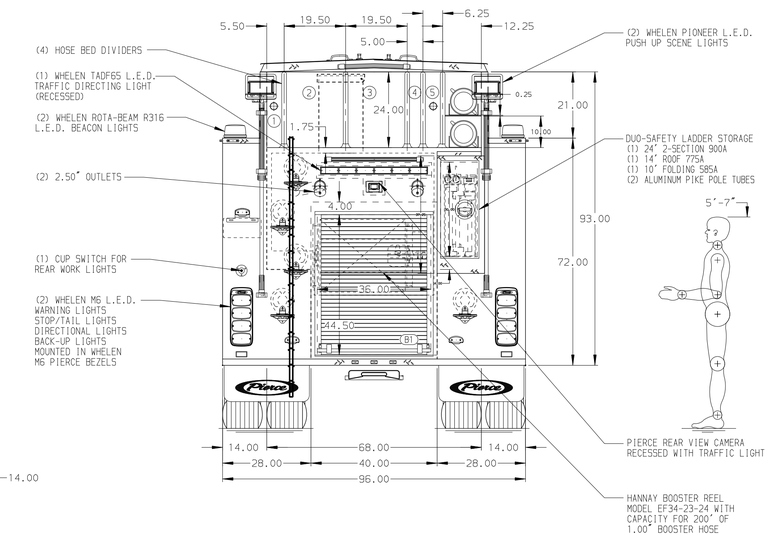

NOTE
DIMENSIONS SHOWN ARE APPROXIMATE AND ARE SUBJECT TO MINOR DEVIATIONS AS MAY OCCUR OR BE NECESSARY IN CONSTRUCTION.
MINOR DETAILS NOT SHOWN.

1. ONE 1.50 OUTLET WITH 2.00 PIPING AND SWIVEL LOCATED IN CENTER BUMPER TRAY
2. SHORELINE RECEPTACLE WITH KUSSMAUL SUPER AUTO-EJECT LOCATED ON DRIVER SIDE OF THE CAB
3. AIR INLET WITH DISCONNECT COUPLING IN THE DRIVER SIDE STEPWELL
4. BATTERY CHARGER LOCATED IN COMPARTMENT PER SHOP ORDER
5. BATTERY CHARGE INDICATOR LOCATED ON THE DRIVER SIDE SEAT RISER
6. SIX ADJUSTABLE SHELVES IN COMPARTMENTS PER SHOP ORDER
7. THREE FLOOR MOUNTED SLIDE-OUT TRAY IN COMPARTMENT PER SHOP ORDER

CUSTOMER APPROVAL
APPROVED BY: _____
DATE: _____

REV	DATE	BY	CH
▽	-	-	-

CHASSIS DATA	
MAKE	PIERCE
MODEL	ENFORCER

Pierce MANUFACTURING INC.

TITLE	Pierce Pumper Approval Drawing -
FOR	Sumner Fire Department -
DWG NO.	38101AD

JOB NO.	38101
SCALE	1:24
DATE	
DRAWN BY	MMF
28JUN22	
CHECKED BY	COL
30JUN22	
SHEET SIZE	D
SHEET NO.	1 OF 1

View File Created 30-JUN-2022 11:06:28