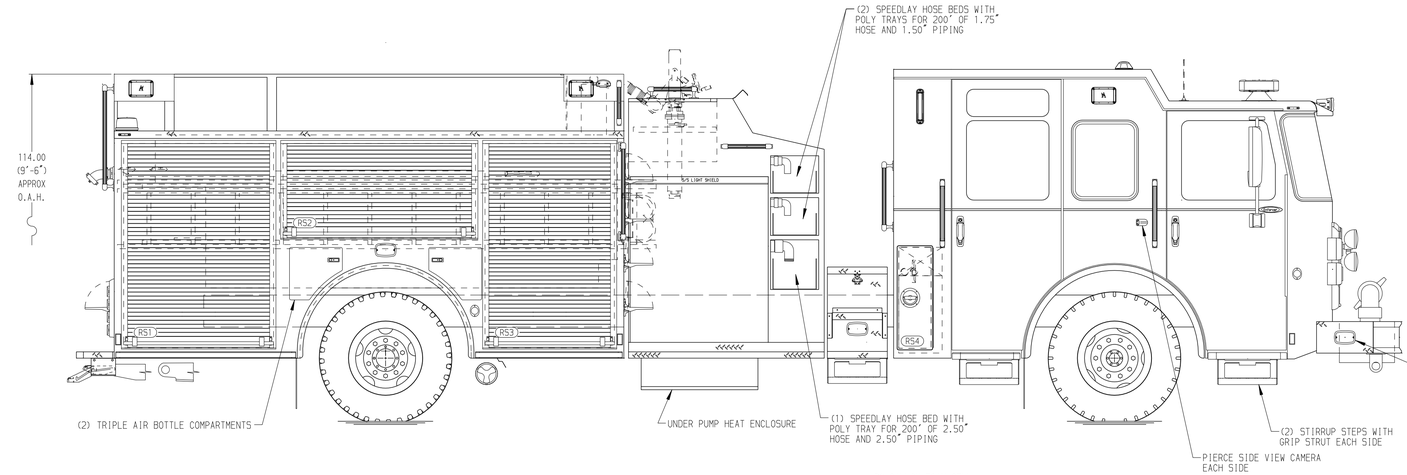

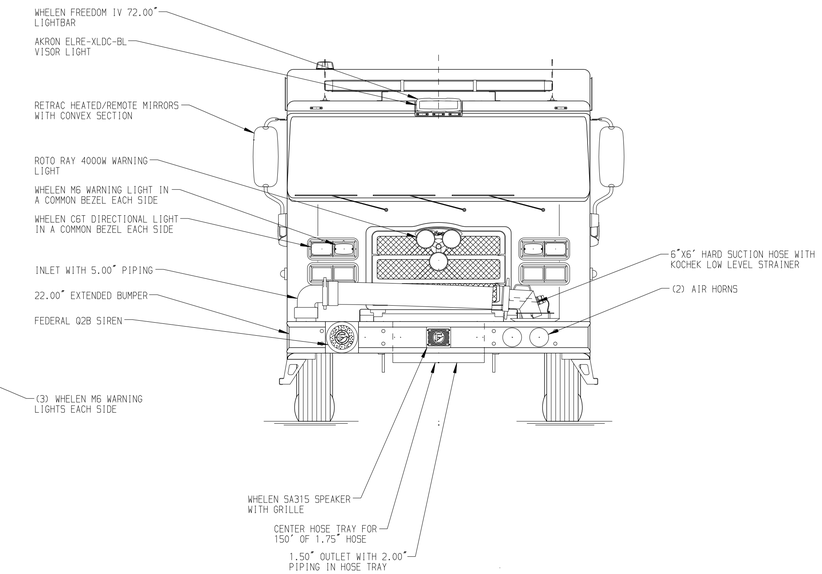

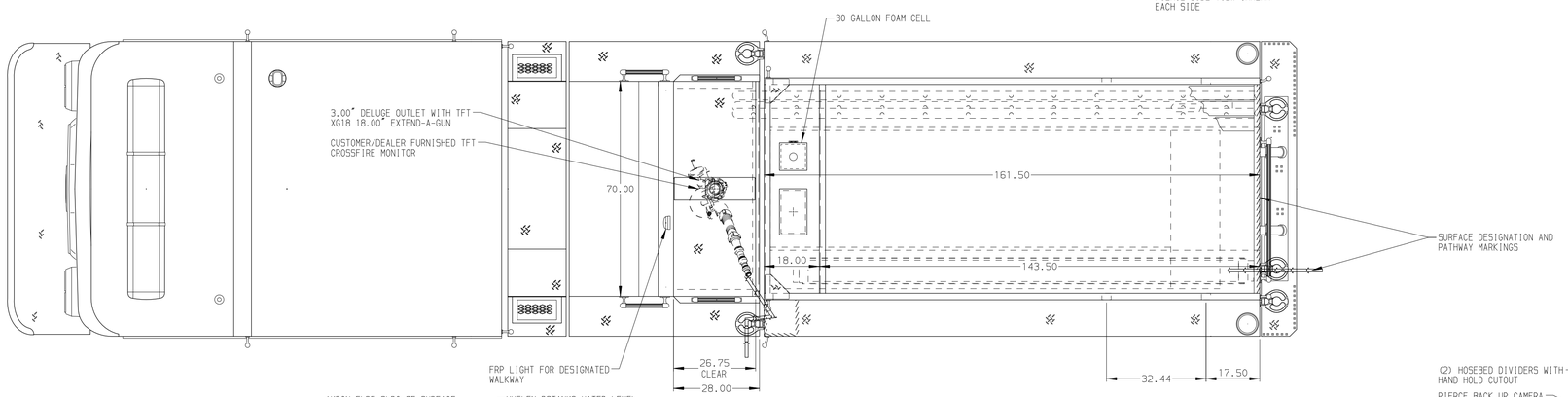

HOSEBED CAPACITIES

1. 500' OF 3.00" D.J. POLY HOSE
2. 1000' OF 5.00" D.J. POLY HOSE
3. 500' OF 3.00" D.J. POLY HOSE

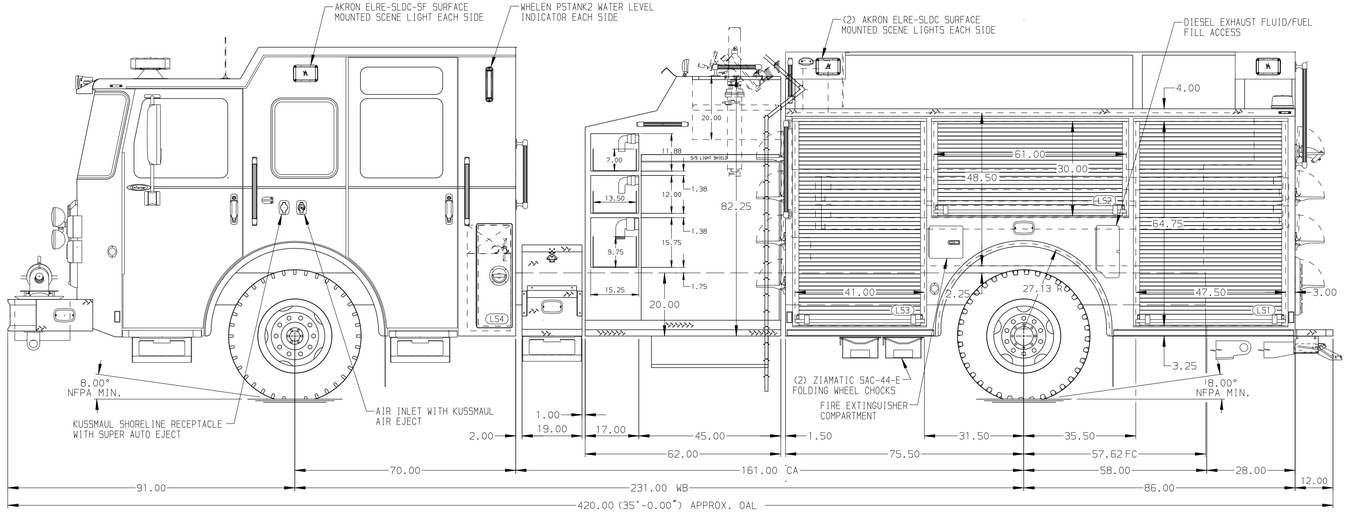

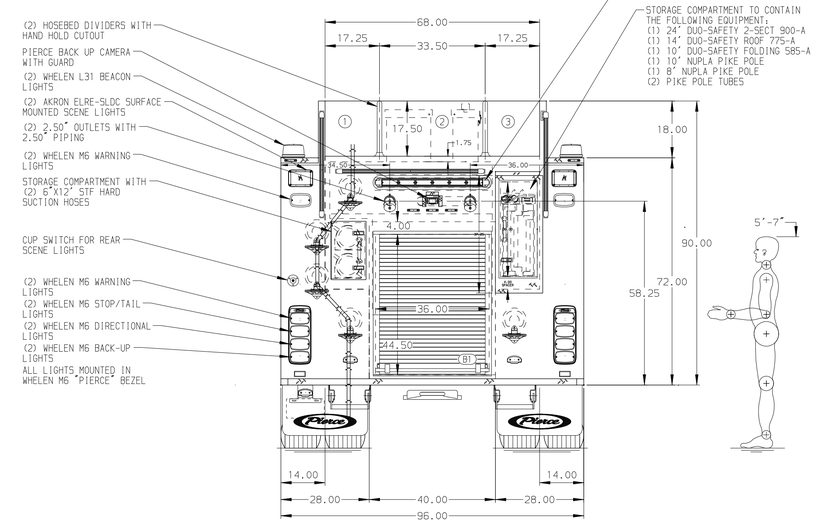

ALUMINUM BODY | SIDE ROLL AND FRONTAL IMPACT PROTECTION | MAXIMUM O.A.H. 123.00"

NOTE

DIMENSIONS SHOWN ARE APPROXIMATE AND ARE SUBJECT TO MINOR DEVIATIONS AS MAY OCCUR OR BE NECESSARY IN CONSTRUCTION.
MINOR DETAILS NOT SHOWN.

1. BATTERY CHARGER LOCATED PER ORDER
2. THREE FULL WIDTH/DEPTH ADJUSTABLE SHELVES WITH SIDES LOCATED PER ORDER
3. ONE FULL WIDTH/DEPTH ADJUSTABLE TRAY MOUNTED ON A SLIDEMASTER WITH SIDES LOCATED PER ORDER
4. ONE FLOOR MOUNTED SLIDE-OUT TRAY WITH SPECIAL SIDES LOCATED PER ORDER
5. ONE SWING-OUT TOOLBOARD WITH PEGBOARD PATTERN LOCATED PER ORDER
6. ONE VERTICAL PARTITION LOCATED PER ORDER
7. ONE HOSE STORAGE BOX LOCATED PER ORDER
8. PEGBOARD WITH TRACKS ON REAR WALL PER ORDER
9. AKRON EDUCTOR SINGLE AGENT FOAM SYSTEM
10. TWO 120V DUPLEX RECEPTACLES LOCATED IN CAB PER ORDER
11. SIX 120V DUPLEX RECEPTACLES IN REAR BODY COMPARTMENTS LOCATED PER ORDER

REV	DATE	BY	CH
▽	-	-	-

CUSTOMER APPROVAL

APPROVED BY:

DATE:

Pierce MANUFACTURING INC.

CHASSIS DATA	
MAKE	PIERCE
MODEL	ENFORCER
TITLE	2000-D-1030P,1000 GAL. WATER W/30 GAL. FOAM CELL 161" PUMPER BODY,45" TOP CONTROL,DELUGE
FOR	WAYLAND JOINT FIRE DISTRICT WAYLAND,NY
DWG NO.	38125AD
JOB NO.	38125
SCALE	1:24
DATE	
DRAWN BY	BST 29AUG22
CHECKED BY	PHA 29AUG22
SHEET SIZE	D
SHEET NO.	1 OF 1

View File Created 30-AUG-2022 07:01:15