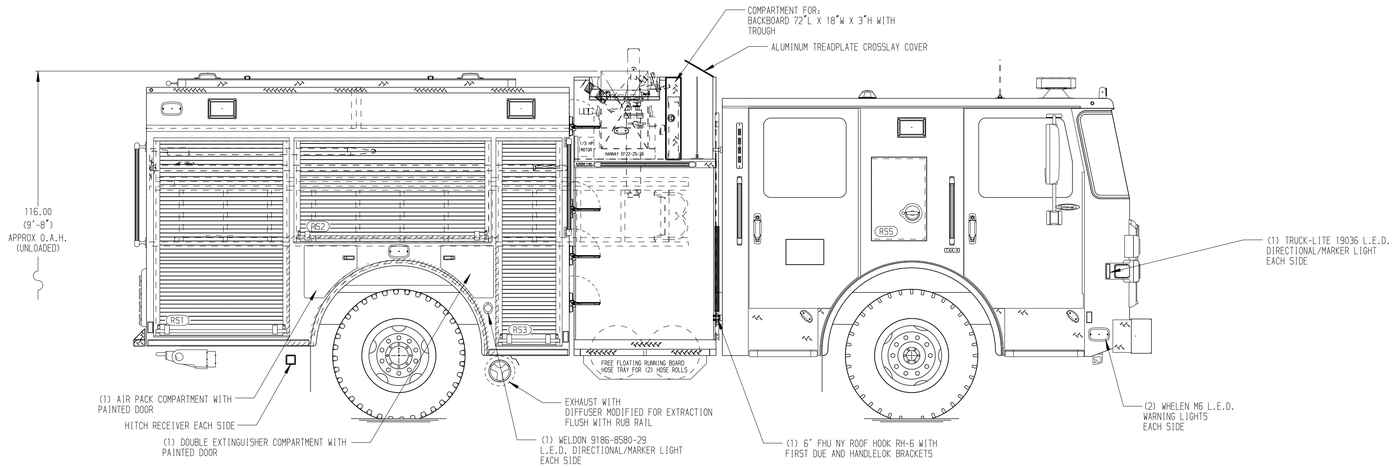

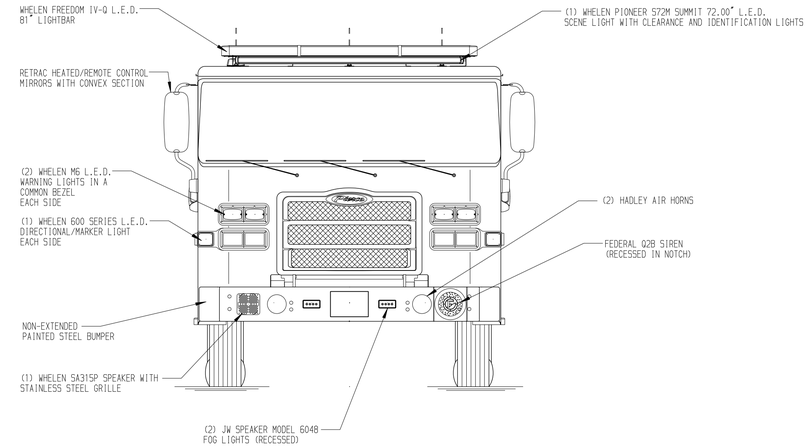

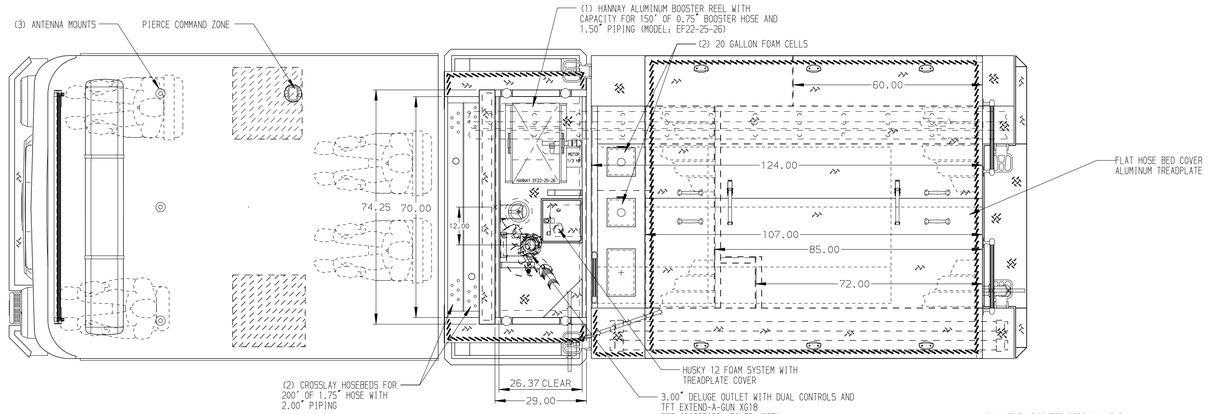

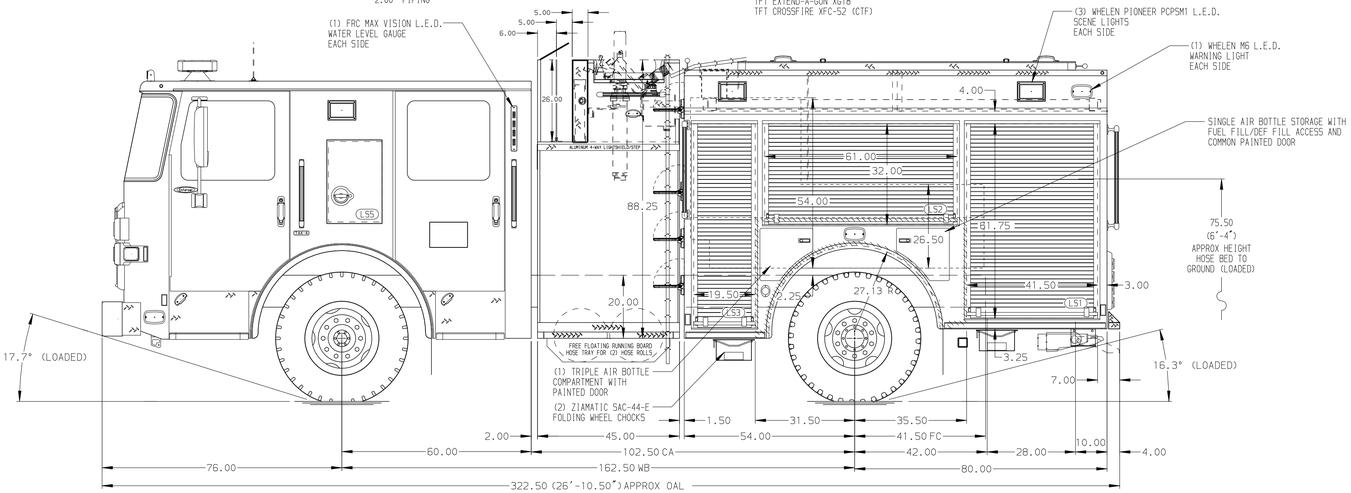

HOSEBED CAPACITIES

1. 200' OF 2.50" DJP HOSE
2. 200' OF 1.75" DJP HOSE
3. 200' OF 1.75" DJP HOSE
4. 600' OF 2.50" DJP HOSE W/200' OF 1.75" DJP HOSE BUNDLE
5. 1000' OF 4.00" DJP HOSE

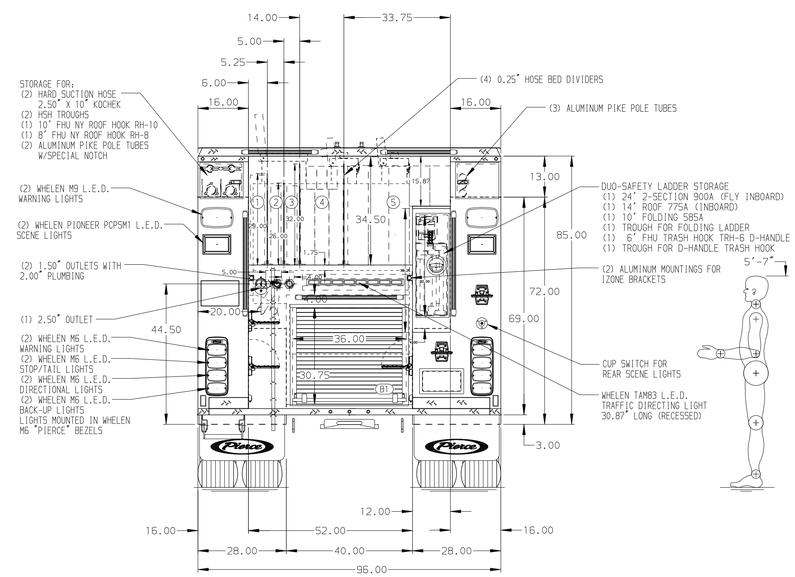

ALUMINUM BODY

MAXIMUM O.A.H. 118.00"

NOTE

DIMENSIONS SHOWN ARE APPROXIMATE AND ARE SUBJECT TO MINOR DEVIATIONS AS MAY OCCUR OR BE NECESSARY IN CONSTRUCTION.
MINOR DETAILS NOT SHOWN.

1. AIR INLET/OUTLET WITH DISCONNECT FITTING RECESSED AT DRIVER'S SIDE PUMP PANEL
2. TAK-4 LUBE SYSTEM
3. CHARGER LOCATED AT THE CREW CAB FORWARD FACING CENTER SEAT RISER
4. BATTERY CHARGE INDICATOR LOCATED ON THE DRIVER'S SEAT RISER
5. 120V BLUE SEA SURE EJECT 7051 SHORELINE RECEPTACLE LOCATED AT DRIVER'S SIDE PUMP PANEL
6. DUAL L.E.D. LIGHT STRIPS ON HOSE BED COVER FOR HOSE BED ILLUMINATION LOCATED PER ORDER
7. THREE P25 LIGHTS IN CARGO AREA PER ORDER

REV	DATE	BY	CH
3	19MAR24	SAM	BSE
2	21DEC23	SAM	BSE
1	26OCT23	SAM	BSE
0	31AUG23	SAM	BSE

CHASSIS DATA
MAKE: PIERCE
MODEL: ENFORCER

Pierce MANUFACTURING INC.

TITLE: 1500-D-540P, 500G WATER W/(2)20G FOAM, 134" BODY (2) CROSSLAYS, LADDERS BTWN TANK & SS, DELUGE

FOR: SONOMA COUNTY FIRE DISTRICT
WINDSOR, CALIFORNIA

DWG NO.: 38136AD-SH1

JOB NO.	38136
SCALE	1:24
DATE	
DRAWN BY	SAM 22AUG23
CHECKED BY	BSE 23AUG23
SHEET SIZE	D
SHEET NO.	1 OF 2

View File Created 20-MAR-2024 10:13:45